MEP Engineering, Inc.
TBPE Registered Engineering Firm #342

STATE OF TEXAS
RANDY C. FUSTON
92454
LICENSED
PROFESSIONAL ENGINEER
02.08.2017

ADDENDUM NO. 1

ISSUED: **February 8, 2017**
BID DATE: **February 13, 2017**

Project Name Bridge Point ES Renovation
EISD CSP No. 201617-009
MEP Project No. 10830

Drawings & Specifications Entitled:
EISD Bridge Point Elementary School Renovation
Austin, Texas

Owner: Eanes Independent School District

The following additions and changes are to be made to the Drawings and Specifications and hereby become a part of the Contract:

FRONT END SPECIFICATIONS

ITEM F1.01 Specifications: Project Manual Table of Contents
1. ADD in the Specifications: "23 55 13 - Fuel- Fired Duct Heaters."

ITEM F1.02 Specifications: 00 30 00 Bid Form - Competitive Sealed Proposal
1. REPLACE the entire section (2 pages).

ITEM F1.03 Specifications: 01 22 00 Unit Prices
1. REPLACE the entire section (3 pages).

ARCHITECTURAL

ITEM A1.01 Drawings: A1 Level 1 Floor Plan Floor Plan Lower Level
1. ADD General Note "8. Remove the existing ceiling tile and ceiling grid in the entire classroom for installation of new ductwork. Temporarily support any ceiling devices and associated devices as noted in the electrical plans (noted in this addendum). Install new type 1 acoustical tile and grid specified in 09 51 00. Reinstall existing devices in new ceiling grid/tile. This note applies specifically to rooms: 100 thru 106, 108 thru 110, 112, 200 thru 205, 207B, 208 thru 211 and 213."

ITEM A1.02 Drawings: A2 Level 2 Floor Plan Floor Plan Lower Level
1. ADD General Note "8. Remove the existing ceiling tile and ceiling grid in the entire classroom for installation of new ductwork. Temporarily support any ceiling devices and associated devices as noted in the electrical plans (noted in this addendum). Install new type 1 acoustical tile and grid specified in 09 51 00. Reinstall existing devices in new ceiling grid/tile. This note applies specifically to rooms: 300 thru 306, 308 thru 310, 312, 400 thru 411 and 413."

MECHANICAL

ITEM M1.01 Specifications: 23 09 93 Control Sequences
1. REPLACE the entire section (9 pages).

ITEM M1.02 Specifications: 23 55 13 Fuel- Fired Duct Heaters
1. ADD the entire section (1 page).

ITEM M1.03 Specifications: 23 74 18 Packaged Indoor Heat Recovery Units with Desiccant Wheels
2. REPLACE the entire section (3 pages).

ITEM M1.04 Specifications: 23 81 19 Self Contained Air Conditioners
1. ADD to paragraph 2.12 A: "Trane."

ITEM M1.05 Specifications: 23 81 26 Air-Cooled Condensing Units
1. ADD to paragraph 2.7 A: "Trane."

ITEM M1.06 Specifications: 23 85 35 Air Cooled Heat Pump Outdoor Units
1. ADD to paragraph 1.8 A: "Trane."

ITEM M1.07 Specifications: 23 85 36 Heat Pump Fan Coil Units
1. ADD to Paragraph 1.9 A: "Trane."

ITEM M1.08 Drawings: M0.2 HVAC Schedules
1. REPLACE with attached 30" x 42" sheet.

ITEM M1.09 Drawings: M0.3 HVAC Schedules
1. REPLACE with attached 30" x 42" sheet.

ITEM M1.10 Drawings: M3.0 Basement Level - Area B Mech Rm Plan - New - HVAC
1. REPLACE with attached 30" x 42" sheet

ITEM M1.11 Drawings: M3.3 Level 1 - Area C Plan - New - HVAC
1. REPLACE with attached 30" x 42" sheet

ITEM M1.12 Drawings: M3.4 Level 1 - Area D Plan - New - HVAC
1. REPLACE with attached 30" x 42" sheet

ITEM M1.13 Drawings: M3.5 Level 2 - Area C Plan - New - HVAC
1. REPLACE with attached 30" x 42" sheet

ITEM M1.14 Drawings: M3.6 Level 2 - Area D Plan - New - HVAC
1. REPLACE with attached 30" x 42" sheet

ITEM M1.15 Drawings: M4.1D Enlarged Mechanical HRU Plan - Demo
1. ADD keyed note 4: "Existing control center and associated wiring to be removed."
2. ADD note 4 adjacent to the electrical control center on HRU-1, HRU-2 and HRU-3 on each detail.

ITEM M1.16 Drawings: M4.1.Enlarged Mechanical HRU Plan
1. REPLACE with attached 30" x 42" sheet

ITEM M1.17 Drawings: M5.1. – Mechanical Details
1. REPLACE with attached 30" x 42" sheet

ELECTRICAL

ITEM E1.01 Drawings: E3.0 Basement Level - Area B Mechanical Room Plan
1. ADD keyed note: "6. Disconnect existing gas duct heater unit for replacement. Connect new unit to existing circuit, extend conduit and conductors as required, reuse existing disconnect switch."
2. ADD keyed note 6 adjacent to AHU-B3 and B4.

ITEM E1.02 Drawings: E3.3 Level 1 - Area C Plan - New - Electrical

1. ADD General Note "19. Temporarily hang any devices in ceilings being removed in order to install new work. Reinstall to original condition. Replace any devices damaged during construction with new to match existing. See architectural sheets for areas involving ceiling work."

ITEM E1.03 Drawings: E3.4 Level 1 - Area D Plan - New - Electrical

1. ADD General Note "19. Temporarily hang any devices in ceilings being removed in order to install new work. Reinstall to original condition. Replace any devices damaged during construction with new to match existing. See architectural sheets for areas involving ceiling work. This note applies specifically to rooms: 100 thru 106, 108 thru 110, 112, 200 thru 205, 207B, 208 thru 211 and 213."

ITEM E1.04 Drawings: E3.5 Level 2 - Area C Plan - New - Electrical

1. ADD General Note "19. Temporarily hang any devices in ceilings being removed in order to install new work. Reinstall to original condition. Replace any devices damaged during construction with new to match existing. See architectural sheets for areas involving ceiling work."

ITEM E1.05 Drawings: E3.6 Level 2 - Area D Plan - New - Electrical

1. ADD General Note "19. Temporarily hang any devices in ceilings being removed in order to install new work. Reinstall to original condition. Replace any devices damaged during construction with new to match existing. See architectural sheets for areas involving ceiling work. This note applies specifically to rooms: 300 thru 306, 308 thru 310, 312, 400 thru 411 and 413."

END OF ADDENDUM NO. 1

Mrs. Sylvie Pouget
Eanes Independent School District
601 Camp Craft Rd
Austin, Texas 78746

Dear Ms. Pouget:

The undersigned, having examined the site of the proposed Work for the Bridge Point Elementary School HVAC Renovation hereby proposes as General Contractor to furnish all materials, labor, equipment and services necessary to complete the work in strict conformity with all of the Contract Documents, including the drawings, specifications and Addenda No. _____, Addenda No. _____, Addenda No. _____, prepared by MEP Engineering and any laws, statutes, ordinances, rules or regulations of any governmental agencies or public authorities relating thereto for the sum of:

Owner's Contingency Allowance (Betterment) of $100,000 to be included in Base Bid

Base Bid

_____Dollars

($_____).

Unit Price 1A: _____ Dollars ($_____).

Unit Price 1B: _____ Dollars ($_____).

Unit Price 2A: _____ Dollars ($_____).

Unit Price 2B: _____ Dollars ($_____).

Unit Price 3: _____ Dollars ($_____).

Unit Price 4: _____ Dollars ($_____).

Unit Price 5: _____ Dollars ($_____).

If awarded the Contract, the undersigned agrees to execute the Contract for Construction as included in the Bid Package and Substantially Complete the work, including Final Clean within _____ calendar days from issuance of Notice to Proceed for the Bridge Point Elementary School as specified after Substantial Completion, or be subject to Liquidated Damages as explained in the Owner - Contractor Agreement (enclosed) at the rate schedule listed in the General Conditions of the Contract.

Contractor acknowledges that the Substantial Completion Date and Final Completion Date is essential to the Owner's operational and educational activities, and therefore time is of the essence in meeting said date. All bonds and proof of insurance (in a form satisfactory to the Owner) shall be provided to the Owner within ten (10) days of award of the Contract for Construction. Work to commence within ten (10) days of contract execution.

Bidder agrees that this Bid shall be good and may not be withdrawn for a period of Thirty (30) calendar days, after the scheduled closing time for receiving Bids.

The Owner does not obligate itself to accept the lowest or any bid. EISD reserves the rights to award the Contract to any bidder at any time within thirty days after the opening of the proposals, to reject any or all proposals, and to waive objection to any informality in the submission of proposals.

Capitalized terms not otherwise defined in this letter shall have the meanings assigned them in the Contract for Construction.

The undersigned affirms that they are duly authorized to execute this contract, that this company, corporation, firm, partnership or individual has not prepared this bid in collusion with any other Bidder, and that the contents of this bid as to prices, terms or conditions of said bid have not been communicated by the undersigned nor by any employee or agent to any other person engaged in this type of business prior to the official opening of this bid.

Respectfully Submitted,

Signed _____

Title _____

For (Firm)_____

Address _____

Telephone _____

(Sealed if Corporation)
State whether Corporation,
Partnership, or Individual

SECTION 01 22 00 – UNIT PRICES

PART 1 – GENERAL

1.1 SECTION INCLUDES

A. CONDITIONS OF THE CONTRACT AND DIVISION 1, as applicable, apply to this Section.

B. Measurement and payment criteria applicable to portions of the Work performed under a unit price payment method.

C. Defect assessment and non-payment for rejected work

1.2 AUTHORITY

A. Measurement methods delineated in the individual specification sections complement the criteria of this Section. In the event of conflict, the requirements of the individual specification section govern.

B. Take all measurements and compute quantities. The Architect will verify measurements and quantities.

1.3 UNIT QUANTITIES SPECIFIED

A. Quantities indicated in the Contract Documents are for bidding and contract purposes only. Quantities and measurements supplied or placed in the Work and verified by the Engineer determine payment.

B. If the actual Work requires more or fewer quantities than those quantities indicated, provide the required quantities at the unit sum/prices contracted.

1.4 MEASUREMENT OF QUANTITIES

A. Measurement Devices:

1. Weigh Scales: Inspected, tested and certified by the applicable State Weights and Measures Department within the past year.
2. Platform Scales: Of sufficient size and capacity to accommodate the conveying vehicle.
3. Metering Devices: Inspected, tested and certified by the applicable State department within the past year.

B. Measurement by Weight: Concrete reinforcing steel, rolled or formed steel or other metal shapes will be measured by handbook weights. Welded assemblies will be measured by handbook or scale weight.

C. Measurement by Volume: Measured by cubic dimension using mean length, width and height or thickness.

D. Measurement by Area: Measured by square dimension using mean length and width or radius.

E. Linear Measurement: Measured by linear dimension, at the item centerline or mean chord.

F. Stipulated Sum/Price Measurement: Items measured by weight, volume, area, or linear means or combination, as appropriate, as a completed item or unit of the Work.

1.5 PAYMENT

A. Payment Includes: Full compensation for all required labor, Products, tools, equipment, plant, transportation, services and incidentals; erection, application or installation of an item of the Work; overhead and profit..

B. Final payment for Work governed by unit prices will be made on the basis of the actual measurements and quantities accepted by the Architect multiplied by the unit/sum price for Work which is incorporated in or made necessary by the Work.

1.6 DEFECT ASSESSMENT

A. Replace the Work, or portions of the Work, not conforming to specified requirements.

B. If, in the opinion of the Architect, it is not practical to remove and replace the Work, the Engineer will direct one (1) of the following remedies::
   1. The defective Work may remain, but the unit sum/price will be adjusted to a new sum/price or reduced 50 percent at the discretion of the Engineer.
   2. The defective Work will be partially repaired to the instructions of the Architect, and
   3. the unit sum/price will be adjusted to a new sum/price or reduced 50 percent at the discretion of the Engineer.

C. The individual specification sections may modify these options or may identify a specific formula or percentage sum/price reduction.

D. The authority of the Engineer to assess the defect and identify payment adjustment is final.

1.7 NON-PAYMENT FOR REJECTED PRODUCTS

A. Payment will not be made for any of::
   1. Products wasted or disposed of in a manner that is not acceptable.
   2. Products determined as unacceptable before or after placement.
   3. Products not completely unloaded from the transporting vehicle.
   4. Products placed beyond the lines and levels of the required Work.
   5. Products remaining on hand after completion of the Work.
   6. Loading, hauling and disposing of rejected Products.

PART 2 – PRODUCTS

Not Used

PART 3 – EXECUTION

3.1 SCHEDULE OF UNIT PRICES

A. Unit Price No. 1 – Unit Prices for Refrigeration Lines
   A. Base Proposal Price: Shall be based on new refrigeration lines for each split DX unit from the indoor unit located in the building to the new outdoor unit. Lengths of refrigeration lines as shown on Drawings. In addition, proposers shall quote unit prices for the following:
   1A Unit price per 50 feet of length to reuse the existing fan coil unit located in the new closet to the new heat pump located outside. This unit price shall include cleaning and pressure testing of existing refrigeration lines.
   1B Unit price per 50’ of length to reuse the existing heat recovery unit located on the mezzanine to the condensing unit(s) located outside. This unit price shall include cleaning and pressure testing of existing refrigeration lines.

B. Unit Price No. 2 – Unit Prices for Electrical
   B Base Proposal Price: Shall be based on new branch circuits and conduit to the new fan coil unit locations in the new classroom mechanical closet.
   2A Unit price per 10 feet of length to reuse the existing conductor and raceway from the panel to the existing fan coil unit location.
   2B Unit price per 10 feet of length to extend the new conductor and raceway from the existing fan coil unit location to the new classroom mechanical closet.

C. Unit Price No. 3 – Unit Price for Acoustical Ceiling
   A. Provide a cost per square foot unit price to replace all existing acoustical grid and ceiling tile in the 45 classrooms, each approximately 800 square feet, that have

new HVAC Equipment closets installed. Ceiling Grid to be 2' x 2' USG Interiors DX/DXL -24 or acceptable equal. Ceiling Tile to be 2' x 2' USG Radar ClimaPlus #2210 or acceptable equal.

D. Unit Price No. 4 – Unit Price for Condenser Pads
Provide a cost per square foot unit price to demolish the individual Condensing Unit concrete pads and provide new Condensing Unit Pads that are 10' x 10' square for four condenser units combined. New pads to be 5" thick of 3500 PSI concrete with No. 3 steel reinforcing at 18" on center. Excavate 4 inches of the upper layer of soil and provide a 2" sand bed for the new pads.

E. Unit Price No. 5 – Unit Price for Piping Shrouds
Provide a cost per square foot to provide Pre-finished 24 gauge galvanized steel with a Kynar 500 finish in lieu of the 24 gauge galvanized steel installed at all the exterior pipe enclosures as shown on Detail 3/A1 for the HVAC piping. This includes the existing enclosures for the condensing units on the first floor.

END OF SECTION 01 22 00

SECTION 23 09 93 - CONTROL SEQUENCES

PART 1 - GENERAL

1.1 SCOPE

A. The HVAC system will operate in either the occupied or unoccupied modes. The time schedule shall reside in each unit's respective controller. Optimum start/stop energy management functions shall be provided. The BAS/ATC' time schedule shall determine the proper mode of operation.

1.2 Heat Pump Units (FCU/HP) – D/X Cooling, Heat Pump, Electric Supplemental Heating Coil, Supply Fan.

A. Each FCU/HP shall utilize a stand-alone DDC controller dedicated only for control of its respective unit. Each DDC controller shall be located in a NEMA 3R enclosure at the unit it serves.

B. The FCU/HP shall be started and stopped by an optimum start/stop schedule located in the unit controller. When either the optimum start/stop schedule or HMI override function energizes the FCU/HP control system, the DDC system shall enable the system.

C. An override feature on the space sensor shall allow the unit to operate after hours when the DDC time schedule has them scheduled off.

D. The DDC system shall control the compressor(s) to maintain set point. Upon a rise in space temperature compressor(s) shall stage on.

E. The DDC system shall control the and operate the reversing valve and electric heater to maintain set point. Upon a drop in space temperature the evaporator blower shall start, reversing valve shall reverse and the compressor(s) shall stage on. Upon a continual drop in space temperature, the electric heating coil shall be energized to maintain setpoint

F. The supply air smoke detectors (provided by Div. 26) shall de-energize the RTU if the products of combustion are detected. See Div 26 for location and quantity of units with smoke detectors. When the supply air smoke detectors de-energizes the unit, a smoke detector shut down alarm shall be displayed at the HMI

G. Unit fan shall run continuously when the unit is allowed to operate by the DDC system in the occupied mode. Unit fan shall cycle on and off when in the unoccupied mode or when overridden by the override feature on the space sensor

H. The DDC system shall monitor FCU/HP runtime. When the FCU/HP has operated for an owner defined time period, the HMI shall notify maintenance personnel that service/inspection is required

I. Upon any fire alarm activation a relay (provided by Div. 26) shall de-energize the FCU/HP. When the FCU/HP de-energizes a shut down alarm shall be displayed at the HMI

1.3 Rooftop Units (RTU) – D/X Cooling, Hot Gas Reheat, Gas Heating, Supply Fan

1. Each RTU shall utilize a stand-alone DDC controller dedicated only for control of its respective unit. Each DDC controller shall be located in a NEMA 3R enclosure at the unit it serves.
2. The RTU shall be started and stopped by an optimum start/stop schedule located in the unit controller. When either the optimum start/stop schedule or HMI override function energizes the RTU control system, the DDC system shall enable the system.
3. An override feature on the space sensor shall allow the unit to operate after hours when the DDC time schedule has them scheduled off.
4. The DDC system shall control the compressor(s) to maintain temperature set point. Upon a rise in space temperature, the compressor(s) shall stage on.
5. The DDC system shall control the compressor(s) and bypass valves for reheat to maintain humidity set point. Upon a rise in space humidity, the compressor(s) shall stage on, cycle the valves to utilize hot gas reheat.

6. The DDC system shall control the gas heater to maintain set point Upon a drop in space temperature The burner shall ignite and stage and the evaporator blower shall start.
7. The return air smoke detectors (provided by Div. 28) shall de-energize the RTU if the products of combustion are detected. See Div 26 for location and quantity of units with smoke detectors. When the return air smoke detectors de-energizes the unit, a smoke detector shut down alarm shall be displayed at the HMI.
8. Unit fan shall run continuously when the unit is allowed to operate by the DDC system in the occupied mode. Unit fan shall cycle on and off with the compressor when in the unoccupied mode or when overridden by the override feature on the space sensor.
9. The DDC system shall monitor RTU runtime. When the RTU has operated for an owner defined time period, the HMI shall notify maintenance personnel that service/inspection is required.
10. Upon any fire alarm activation a relay (provided by Div. 28) shall de-energize the RTU. When the RTU de-energizes a shut down alarm shall be displayed at the HMI.

1.4 Heat Recovery Unit (HRU) – Direct Expansion Cooling, Electric Heating Coil, Supply and Exhaust Fan, Heat recovery Wheel, Outside and Exhaust Air Damper.

A. The controls contractor shall provide a DDC controller to control all functions of the HRU. The program shall reside in this controller and accomplish all sequences. The controller shall be equipped with a BACNET communications port to communicate all outputs back to the building DDC controls
B. Each HRU shall utilize a building DDC controller dedicated only for control of its respective unit. Each DDC controller shall be located in a NEMA 1 enclosure at the unit it serves.
C. The HRU shall be started and stopped by a start/stop schedule located in the building DDC controller. When either the start/stop schedule, a unoccupied hours override or HMI override function calls for the HRU to start a start command shall be sent to the condensing unit to start, and after a two minute(adj.)delay the DDC system shall enable the system.
D. The unit DDC system shall open the outside and exhaust air dampers. The exhaust and supply fans shall not start until a limit switch on each damper is made.
E. The exhaust fans shall start first. After proof of flow the energy recovery wheel shall then start.
F. After a one minute delay and proof of wheel rotation (amp probe) the supply fan shall start.
G. The unit DDC system shall cycle the compressors to maintain 54 degrees F if the ambient temperature is above 55 degrees F.
H. The unit DDC system shall control the stages of electric heat to maintain 60 degrees F if the ambient temperature is below 55 degrees F and 65 degrees if ambient temperature is below 40 degrees F.
I. The supply air smoke detectors (provided by Div. 26) shall de-energize the HRU if the products of combustion are detected. See Div 26 for location and quantity of units with smoke detectors. When the supply air smoke detectors de-energizes the unit, a smoke detector shut down alarm shall be displayed at the HMI
J. The unit DDC system shall monitor HRU runtime. When the HRU has operated for an owner defined time period, the HMI shall notify maintenance personnel that service/inspection is required
K. Upon any fire alarm activation a relay (provided by Div. 26) shall de-energize the HRU. When the HRU de-energizes a shut down alarm shall be displayed at the HMI
L. The unit DDC control system shall monitor the HRU leaving air temperature and fan status. If leaving air temperature is greater than 20 degrees from set-point 10 minutes

after startup, de-energize the unit. If the leaving air temperature is greater than 5 degrees from set-point for 10 minutes, within any 30 minute period, the unit shall be de-energized.

1.5 Outside Air Unit(OAU) – Direct Expansion Cooling, Gas Heating, Supply Fan, Outside Air Damper.

A. The OAU shall be supplied by a unit manufacturer BACNET DDC controller. The program shall reside in this controller and accomplish all sequences. The controller shall be equipped with a BACNET communications port to communicate all outputs back to the building DDC controls

B. Each OAU shall utilize a stand-alone DDC controller dedicated only for control of its respective unit. Each DDC controller shall be located in a NEMA 3R enclosure at the unit it serves. The building DDC controller shall enable and disable the unit by a schedule or by override due to the energize of kitchen exhaust fan(s).

C. The OAU shall be started and stopped by a start/stop schedule located in the building controller.

D. The DDC system shall open the outside air dampers. The supply fans shall not start until a limit switch on the damper is made.

E. The supply fan shall start.

F. The unit DDC system shall cycle the compressors to maintain 54 degrees F if the ambient temperature is above 55 degrees F.

G. The unit DDC system shall control the stages of gas heat to maintain 60 degrees F if the ambient temperature is below 56 degrees F and 65 degrees if ambient temperature is below 40 degrees F.

H. The supply air smoke detectors (provided by Div. 26) shall de-energize the OAU if the products of combustion are detected. See Div 26 for location and quantity of units with smoke detectors. When the supply air smoke detectors de-energizes the unit, a smoke detector shut down alarm shall be displayed at the HMI

I. The unit DDC system shall monitor OAU runtime. When the OAU has operated for an owner defined time period, the HMI shall notify maintenance personnel that service/inspection is required

J. Upon any fire alarm activation a relay (provided by Div. 26) shall de-energize the OAU. When the OAU de-energizes a shut down alarm shall be displayed at the HMI

K. The unit DDC control system shall monitor the OAU leaving air temperature and fan status. If leaving air temperature is greater than 20 degrees from set-point 10 minutes after startup, de-energize the unit. If the leaving air temperature is greater than 5 degrees from set-point for 10 minutes, within any 30 minute period, the unit shall be de-energized

L. A CO2 sensor in the cafeteria served by OAU-1 shall energize OAU-1 when the space CO2 levels are above 900 PPM or when the kitchen hood exhaust fan is energized.

1.6 Fan Coil Units (FCU) - D/X cooling Coil, Supply Fan

A. Each FCU shall utilize a stand-alone DDC controller dedicated only for control of its respective unit. Each DDC controller shall be located in a NEMA 1 enclosure at the unit it serves.

B. The FCU shall operate continuously. The supply fan shall cycle with the condensing unit.

C. The DDC system shall control the compressor to maintain set point. Upon a rise in space temperature the compressor and evaporator blower shall start.

D. A float switch in the secondary pan shall de-energize the entire unit when water is detected in the pan

E. The DDC system shall monitor FCU runtime. When the FCU has operated for an owner defined time period, the HMI shall notify maintenance personnel that service/inspection is required

F. Upon any fire alarm activation a relay (provided by Div. 26) shall de-energize the FCU. When the FCU de-energizes a shut down alarm shall be displayed at the HMI

1.7 Unoccupied Hours

A. During unoccupied hours any room thermostat that senses a space temperature 15 degrees above or below setpoint shall override the schedule and allow that unit to operate until the space temperature is within 10 degrees of setpoint.

B. A humidity sensor in association with the space thermostat in Rooms 1410 (Zone 1), 1307 (Zone 2), 1113 (Zone 3), 1305 (Zone 4) and 1311 (Zone 5) shall calculate dew point temperature. When the dew point temperature exceeds 60˚ F within that zone, the DDC system shall override the time schedule and enable all units within the zone to operate. The high limit humidistat shall be mounted above the temperature sensor.

Zone 1 HRU- 1	
Zone 1.1	HP- 1.01 thru 1.20, 2.01 thru 2.17
Zone 2 HRU-2	
Zone 2.1	RTU-1, 2 and 3, HP-3.01 thru 3.12
Zone 3 HRU-3	
Zone 3.1	HP-1.21 thru 1.41
Zone 4 HRU-4	
Zone 4.1	RTU- 4, 5 and 6, RTU-8 thru 19
Zone 5 OAU-1	

1.8 Kitchen Hood (Exhaust and Make up Fans, KEF)

A. The make-up air unit consists of a supply fan and motorized dampers. Supply fan is factory interlocked to start when exhaust fans are energized. Exhaust fan shall be energized when switch on hood face is activated. Both the supply and Exhaust fans shall de-activate upon suppression system activation. Motorized dampers are factory wired to open prior to the fans starting.

1.9 Fire alarm interface shall de-energize all units within the facility.

A. The fire alarm contractor will provide a relay at each unit. The controls contractor shall be responsible for wiring between the relay and the unit controls.

1.10 A phase failure relay (by Div 26)

A. Located in Rm. 1603.2 shall de-energize all 3 phase units. Provide a control panel with UPS, relay and controller for this function.

1.11 Cooler and Freezer

1. The DDC system shall monitor the space temperature of each of these.

1.12 Fan Interlocks.

A. Furnish all fan interlocks shown or called for on the plans, scheduled on the Fan Schedule or required for a complete and operating system.

1.13 Fire Alarm

A. Provide wiring required between the fire alarm relay and all controls on all WSHPs, HRUs, RTUs, EFs & Fans and OAUs. A separate fire alarm relay is not required where EFs and Fans are hardwire interlocked with a piece of equipment that has a fire alarm relay.

PART 2 - INTERLOCKS (Hardwired)

A. General: Provide switches, relays, PE switches, wire, conduit and other necessary devices (except motor starters and starter auxiliaries specified in Division 26 requirements and shown on E-series Drawings) necessary to accomplish interlocks specified, shown on Drawings, indicated in schedules, specified in other control sequences or required for proper functioning of various systems. Show such devices in the composite wiring

diagram. Fan interlocks shall be hardwired unless noted otherwise in the sequences.

PART 3 - ROOM SENSOR COVERS

A. Furnish covers for all thermostats or room sensors installed in gymnasiums, cafeterias, corridors, library, stage, kitchen and as noted on the drawings. Furnish KELE AT 1104 metal thermostat cover.

PART 4 - POINTS LIST

A. Refer to the attached tables for the minimum points to be included. The controls contractor shall include in his bid all points required to accomplish the sequences listed and the points listed on the points list.

END OF SECTION 23 09 93

Heat Recovery Unit (HRU)

	INPUTS												OUTPUTS										SOFTWARE FEATURES																					
	ANALOG						DIGITAL						DIGITAL					ANALOG					CALCULATED						ALARMS					PROGRAMS										
	TEMPERATURE	PRESSURE	RELATIVE HUMIDITY	VOLT/AMPS/ K.W.	CO 2	SETPOINT	DP SWITCH	TEMP. SWITCH	CURRENT SWITCH	SMOKE DETECTOR	AUX. CONTACT	PULSE CONTACT	ON - OFF (H.O.A.)	START/STOP P.B.	OFF-HIGH-LOW	OPEN/CLOSE		0 - 10 Vdc	4 - 20 ma	3 - 15 PSI	FLOATING POINT	OVERRIDE	KWHr/DEMAND	BTUS	POSITION AS % OPN	SETPOINT	TOTALIZATION	RUNTIME	HIGH ANALOG	LOW ANALOG	BINARY	PROOF	MAINTENANCE ALM	TIME OF DAY	START/STOP OPT.	ENTHALPY OPT.	DEMAND LIMITING	DDC/PID CONTROL	EVENT PROGRAM	ALARM MESSAGES	TREND REPORT	DYN. COLOR GRAPHIC	DYN. TREND GRAPH	COMMENTS
HRU						X																											X	X	X					X	X			*
Supply Fan									X					X														X					X											
Return Fan									X					X														X					X											
Heat Wheel									X					X																														
Outside Damper																X																												
Exhaust Damper																X																												
Bypass damper																X																												
Heater														X					X																									
Discharge Temp	X																																											
Compressor 1														X																														**
Compressor 2														X																														**
Compressor 3														X																														**
Compressor 4														X																														**

* Interlock smoke detector with safety control

** Verify quantity with unit supplied.

Fan Coil Units - Heat Pumps (FCU/HP)

	INPUTS												OUTPUTS										SOFTWARE FEATURES																			
	ANALOG						DIGITAL						DIGITAL					ANALOG					CALCULATED						ALARMS						PROGRAMS									
	TEMPERATURE	PRESSURE	RELATIVE HUMIDITY	VOLT/AMPS/ K.W.	CO 2	SETPOINT	DP SWITCH	TEMP. SWITCH	CURRENT SWITCH	SMOKE DETECTOR	AUX. CONTACT	PULSE CONTACT	ON - OFF (H.O.A.)	START/STOP P.B.	OFF-HIGH-LOW	OPEN/CLOSE		0 - 10 Vdc	4 - 20 ma	3 - 15 PSI	FLOATING POINT	OVERRIDE	KWHr/DEMAND	BTUS	POSITION AS % OPN	SETPOINT	TOTALIZATION	RUNTIME	HIGH ANALOG	LOW ANALOG	BINARY	PROOF	MAINTENANCE ALM	TIME OF DAY	START/STOP OPT.	ENTHALPY OPT.	DEMAND LIMITING	DDC/PID CONTROL	EVENT PROGRAM	ALARM MESSAGES	TREND REPORT	DYN. COLOR GRAPHIC	DYN. TREND GRAPH	COMMENTS
Unit Programming																												X					X	X								X	X	
Space Temp	X																																											
Space Adjust						X																																						
Discharge Air Temp	X																																											
Fan														X																														
Compressor 1														X																														*
Compressor 2														X																														*
Reversing Valve														X																														
Electric Heat														X																														*
Electric Heat														X																														*

* Verify quantity with unit supplied.

Rooftop Units (RTU)

	INPUTS												OUTPUTS										SOFTWARE FEATURES																			
	ANALOG						DIGITAL						DIGITAL					ANALOG					CALCULATED						ALARMS					PROGRAMS									
	TEMPERATURE	PRESSURE	RELATIVE HUMIDITY	VOLT/AMPS/ K.W.	CO 2	SETPOINT	DP SWITCH	TEMP. SWITCH	CURRENT SWITCH	SMOKE DETECTOR	AUX. CONTACT	PULSE CONTACT	ON - OFF (H.O.A.)	START/STOP P.B.	OFF-HIGH-LOW	OPEN/CLOSE		0 - 10 Vdc	4 - 20 ma	3 - 15 PSI	FLOATING POINT	OVERRIDE	KWHr/DEMAND	BTUS	POSITION AS % OPN	SETPOINT	TOTALIZATION	RUNTIME	HIGH ANALOG	LOW ANALOG	BINARY	PROOF	MAINTENANCE ALM	TIME OF DAY	START/STOP OPT.	ENTHALPY OPT.	DEMAND LIMITING	DDC/PID CONTROL	EVENT PROGRAM	ALARM MESSAGES	TREND REPORT	DYN. COLOR GRAPHIC	DYN. TREND GRAPH	COMMENTS
Unit Programming																												X					X							X	X			
Space Temp	X																												X	X														
Space Adjust						X																																						
Discharge Air Temp	X																												X	X														
Fan														X																														
Fan Status									X																																			
Compressor														X																														
Gas Heating																																												
Capacity modulation														X					X																									

Outside Air Unit - OAU-1

	INPUTS												OUTPUTS										SOFTWARE FEATURES																				
	ANALOG						DIGITAL						DIGITAL					ANALOG					CALCULATED						ALARMS					PROGRAMS									
	TEMPERATURE	PRESSURE	RELATIVE HUMIDITY	VOLT/AMPS/ K.W.	CO 2	SETPOINT	DP SWITCH	TEMP. SWITCH	CURRENT SWITCH	SMOKE DETECTOR	AUX. CONTACT	PULSE CONTACT	ON - OFF (H.O.A.)	START/STOP P.B.	OFF-HIGH-LOW	OPEN/CLOSE		0 - 10 Vdc	4 - 20 ma	3 - 15 PSI	FLOATING POINT	OVERRIDE	KWHr/DEMAND	BTUS	POSITION AS % OPN	SETPOINT	TOTALIZATION	RUNTIME	HIGH ANALOG	LOW ANALOG	BINARY	PROOF	MAINTENANCE ALM	TIME OF DAY	START/STOP OPT.	ENTHALPY OPT.	DEMAND LIMITING	DDC/PID CONTROL	EVENT PROGRAM	ALARM MESSAGES	TREND REPORT	DYN. COLOR GRAPHIC	DYN. TREND GRAPH	COMMENTS
OAU						X																						X					X	X	X				X	X	X			
Fan (VFD)														X					X																									
Fan Status									X																																		
Discharge Temp	X																												X	X													
Gas Heating																																											
Capacity modulation														X					X																									
Compressor 1														X																														*
Compressor 2														X																														*
Entering Air Temp	X																																										
Outside Air Damper																X																											
Return Air Damper																X																											
CO2 Sensor					X																																						
Kitchen Hood											X																																**

* Verify quantity with unit supplied.

** Interlock OAU-1 to run when KEF is on.

SECTION 23 55 13 - FUEL- FIRED DUCT HEATERS

PART 1 GENERAL

1.1 WORK INCLUDED
A. This section specifies a gas fired duct furnace complete with all controls and trim.

1.2 REFERENCE STANDARDS
A. Furnish units which are approved by the American Gas Association.
B. Furnish units that comply with the 2015 International Energy Conservation Code.

1.3 APPLICABLE PROVISIONS
A. Refer to Section 23 05 00, Common Work Results for HVAC.

1.4 PERFORMANCE
A. Provide performance as scheduled on drawings. Rate furnace in accordance with test standards of American Gas Association.
B. SUBMITTALS
C. Submit manufacturer's technical product data for all gas-fired duct furnaces. Include sufficient data to substantiate that materials conform to the requirements of this section.

1.5 OPERATION & MAINTENANCE MANUALS
A. Include information on all unit heaters in the Operation and Maintenance Manual.

1.6 DELIVERY, STORAGE AND HANDLING
A. Deliver duct furnaces properly packaged in factory-fabricated containers.
B. Store in a clean, dry space in original containers. Protect products from weather, damaging fumes, construction debris and traffic.
C. Handle carefully to avoid damaging duct furnaces.

PART 2 PRODUCTS
A. Furnish aluminized steel heat exchanger, burner assembly, slip-joint type duct flanges, 115/24 volt transformer, and high limit switch. Furnish 24 volt combination gas valve, automatic pilot with 100% safety shut-off, gas pressure regulator and manual gas cock. Furnish electronic pilot ignition. Draft hood will be 22 ga. aluminized steel and cabinet will be 20 ga. cold rolled steel. Finish will be acrylic high heat baked-on enamel.

2.2 CONTROLS
A. Furnish controls including complete system of automatic combustion and safety controls consisting of the following:
1. High temperature cutoff.
2. Automatic pilot with 100% safety shut-off.
3. Gas pressure regulator.
4. Gas cock.
5. Electric pilot ignition.
6. 115/24 volt transformer.

2.3 Acceptable Manufacturers: Hastings, Modine, Reznor, Sterling, Trane.

PART 3 EXECUTION

3.1 INSTALLATION
A. Install according to manufacturer's recommendations.

END OF SECTION 23 55 13

SECTION 23 74 18 - PACKAGED INDOOR ENERGY RECOVERY UNITS WITH DESICCANT WHEELS

PART 1 - GENERAL

1.1 SCOPE

A. This section specifies the furnishing and installation of components to rebuilt the existing single-zone, constant volume, 100% outside air unit with desiccant wheel, and electric heat for indoor application. The contractor will be responsible for a turnkey installation of new fans, enthalpy wheel, electric heating element, controls, relays, fuses and all other accessories for a complete and working system.

1.2 REFERENCE STANDARDS

A. ARI Standard 1060 for Air-to-Air Energy Recovery Ventilation Equipment
B. ASHRAE 62.
C. Labeled and Listed by ETL and by UL

1.3 APPLICABLE PROVISIONS

A. Refer to Section 23 05 00, Mechanical General Provisions.

1.4 SUBMITTALS

A. Submit manufacturer's technical product data for each component. Include sufficient data to substantiate that each component conforms to the requirements of this section, and provides the performance indicated on the Drawings.

1.5 DELIVERY, STORAGE AND HANDLING

A. Deliver components properly packaged in fabricated containers. Deliver to the site when required by the project schedule.
B. Store in a clean, dry space in original containers. Protect products from weather, damaging fumes, construction debris.
C. Handle carefully to avoid damaging components.

1.6 OPERATION & MAINTENANCE DATA

A. Submit in accordance with Division 01 and Section 23 05 00.

1.7 GUARANTEES AND WARRANTIES

A. Deliver to the Owner a one-year warranty on the entire assembly.
B. Deliver to the Owner a ten-year warranty on each electric heater.

PART 2 - PRODUCTS

2.1 GENERAL

A. Furnish units with sizes, arrangements, capacities and performance shall be as indicated on plans and schedules.
B. Furnish components that are factory preassembled, tested for installation in the existing casing.

2.2 UNIT CASING AND FRAMES

A. The existing unit casing is to be reused.
B. Replace gasketing at demounting locations where unit will be disassembled for removal and installation of new components.

2.3 ACCESS DOORS

A. All components shall be easily accessible through hinged access doors for exhaust, supply, filter, and damper compartments.
B.

2.4 ENERGY RECOVERY WHEEL

A. General: Factory-assembled and tested heat wheels.

B. Wheel Construction

1. 70 microns (0.0027”) thick hardened aluminum alloy.
2. Media wall thickness shall be at least 0.005”.
3. Corrugated flute.
4. Media performance shall have a rated lifetime of 87,600 hours, < 90% of original capacity.
5. Performance independently tested in accordance with applicable ASHRAE 84-91.
6. ARI Rating Method 1060 Flame/smoke test per ASTM E-84 with results of less than 25/50 .

C. Wheel type:

1. Enthalpy type for both sensible and latent energy recovery
2. Internally welded spokes to prevent telescoping and de-lamination.
3. Hardened aluminum alloy.
4. Construct wheels in multiple pieces that allow removal from the unit without disassmbling the unit.
5. Rotor bearings: Spherical ball bearings or pillow block bearings.
6. Include purge that is either fixed or fully adjustable, per application requirement.
7. Design so the proper pressure relationship is maintained to ensure scheduled purge.

D. Acceptable Manufacturers

1. Rotor Source

2.5 FANS

A. Direct drive, single width, single inlet plenum fans for

1. Outside air
2. Exhaust air

B. Variable speed drives.

1. Factory installed and wired for both fans

C. Statically and dynamically balance blower wheels.

D. Grind and polish steel fan shafts that are mounted in permanently lubricated, sealed ball bearing pillow blocks.

E. Selected bearings for minimum (L10) life in excess of 100,000 hours at maximum cataloged operating speeds.

F. Provide separate motors for exhaust and supply blowers.

G. Mount fan and motor assemblies to unit base with neoprene isolators as standard.

2.6 MOTORS

A. Motors that are energy efficient, complying with EPACT standards, for single speed ODP and TE enclosures

B. Permanently lubricated motors

C. Integral overload protection on energy wheel motors.

D. Provide with Aegis grounding ring.

2.7 ELECTRICAL

A. Furnish NEMA 1A electrical enclosure similar to the existing electrical enclosure.

B. Factory wire all internal electrical components for single point power connection.

C. Electrical components that are UL Listed, Approved, or Classified where applicable and wired in compliance with the National Electrical Code.

D. Weatherproof, integral door interlocking disconnect switch

E. Furnish standard components in the control center

1. Motor starters
2. Control circuit fusing
3. Component circuit fusing

4. Control transformer for 24 VAC circuit
5. Terminal strip.

F. Motor starters that consist of a contactor and Class 20 electronic adjustable overload protection.

2.8 COOLING COIL

A. Direct expansion that are factory tested and rated in accordance with ARI 410.
B. Copper tubes with permanently expanded aluminum fins, 12 fpi or less.
C. Equipped with distributors to receive expansion valves at the liquid connections.
D. Stainless steel drain pan.
E. Size with remote condensing unit.
F. Acceptable Manufacturers:
1. Heatcraft or approved equal.

2.9 ELECTRIC HEAT

A. UL listed and circuit fused per NEC.
B. Open element coil with fully modulating SCR Controller.
1. Unit mounted (HRU-2 & 3)
2. Duct mounted (HRU-1)
C. 24 volt control with class 2 transformer.
D. Standard air flow switch to shut down heater if air ceases to flow across heater.
E. Acceptable Manufacturers:
1. Neptronic or approved equal.

2.10 SEQUENCE OF OPERATION

A. Refer to section 23 09 23 for control requirements.

2.11 ACCEPTABLE MANUFACTURERS

A. Greenheck, or approved equivalent.

PART 3 - EXECUTION

3.1 COORDINATION

A. Coordinate size and configuration of new roof curb to match existing roof curb.

3.2 INSTALLATION

A. Coordinate exact size of components with the existing unit casing.
B. Install a trapped condensate drain to nearest roof drain, gutter, or other suitable drain; do not discharge onto roof or ground.
C. Coordinate with Controls contractor.

3.3 STARTUP AND TESTING

A. Contractor's representative shall instruct owner regarding its functions and sequence of operation and verify in writing that the unit has been installed in accordance with the manufacturers recommendations.
B. Contractor's service technician is to work with the controls contractor until digital and analog inputs and outputs are successfully mapped to the FMS. Verify proper operation of each unit in each mode of operation.
C. Verify that each unit is properly charged and lubricated; adjust as required.

END OF SECTION 23 74 23

AIR-COOLED HEAT PUMP UNIT SCHEDULE

MARK	SERVES	MIN. CAP BTUH	EER	REFR.	ELECTRICAL VOLTS/ PH			COMPRESSOR QTY.	MAX. SUCT. TEMP. F	CONDENSER MAX. COND. TEMP. F	AMBIENT TEMP. F	MAKE	MODEL	NOTES
					VOLTS/ PH	MCA	MOCP	QTY.	MAX. SUCT. TEMP. F	MAX. COND. TEMP. F	AMBIENT TEMP. F			
OU-A1	ADMIN	39,000	12.5	R-410A	460/3	8.4	15	1	50	125	105	LENNOX	TPA042H4-460	1,2
OU-A2	ADMIN	39,000	12.5	R-410A	460/3	8.4	15	1	50	125	105	LENNOX	TPA042H4-460	1,2
OU-A3	ADMIN	39,000	12.5	R-410A	460/3	8.4	15	1	50	125	105	LENNOX	TPA042H4-460	1,2
OU-A4	ADMIN	39,000	12.5	R-410A	460/3	8.4	15	1	50	125	105	LENNOX	TPA042H4-460	1,2
OU-A5	MEDIA CTR	39,000	12.5	R-410A	460/3	8.4	15	1	50	125	105	LENNOX	TPA042H4-460	1,2
OU-A6A	MEDIA CTR	83,100	11.0	R-410A	460/3	19.0	30	1	50	125	105	LENNOX	TPA090S4S-460	1,2
OU-A6B	MEDIA CTR	83,100	11.0	R-410A	460/3	19.0	30	1	50	125	105	LENNOX	TPA090S4S-460	1,2
OU-A7	CLASSROOM	39,000	12.5	R-410A	460/3	8.4	15	1	50	125	105	LENNOX	TPA042H4-460	1,2
OU-B1	MUSIC ROOM	83,100	11.0	R-410A	460/3	19.0	30	1	50	125	105	LENNOX	TPA090S4S-460	1,2
OU-B3A	CAFETERIA	83,100	11.0	R-410A	460/3	19.0	30	1	50	125	105	LENNOX	TPA090S4S-460	1,2
OU-B3B	CAFETERIA	83,100	11.0	R-410A	460/3	19.0	30	1	50	125	105	LENNOX	TPA090S4S-460	1,2
OU-B4A	CAFETERIA	83,100	11.0	R-410A	460/3	19.0	30	1	50	125	105	LENNOX	TPA090S4S-460	1,2
OU-B4B	CAFETERIA	83,100	11.0	R-410A	460/3	19.0	30	1	50	125	105	LENNOX	TPA090S4S-460	1,2
OU-A149-A	CORRIDOR	35,000	12.5	R-410A	460/3	8.1	15	1	50	125	105	LENNOX	TPA036H4-460	1,2
OU-A149-B	CORRIDOR	35,000	12.5	R-410A	460/3	8.1	15	1	50	125	105	LENNOX	TPA036H4-460	1,2
OU-C101	CORRIDOR	35,000	12.5	R-410A	460/3	8.1	15	1	50	125	105	LENNOX	TPA036H4-460	1,2
OU-C108	CLASSROOM	35,000	12.5	R-410A	460/3	8.1	15	1	50	125	105	LENNOX	TPA036H4-460	1,2
OU-C110	CLASSROOM	35,000	12.5	R-410A	460/3	8.1	15	1	50	125	105	LENNOX	TPA036H4-460	1,2
OU-C111	CLASSROOM	35,000	12.5	R-410A	460/3	8.1	15	1	50	125	105	LENNOX	TPA036H4-460	1,2
OU-C112	CLASSROOM	35,000	12.5	R-410A	460/3	8.1	15	1	50	125	105	LENNOX	TPA036H4-460	1,2
OU-C113	CORRIDOR	35,000	12.5	R-410A	460/3	8.1	15	1	50	125	105	LENNOX	TPA036H4-460	1,2
OU-C114	CLASSROOM	45,500	12.5	R-410A	460/3	7.8	15	1	50	125	105	LENNOX	TPA048H4-460	1,2
OU-C117	CLASSROOM	35,000	12.5	R-410A	460/3	8.1	15	1	50	125	105	LENNOX	TPA036H4-460	1,2
OU-C118	CLASSROOM	35,000	12.5	R-410A	460/3	8.1	15	1	50	125	105	LENNOX	TPA036H4-460	1,2
OU-C119	CLASSROOM	35,000	12.5	R-410A	460/3	8.1	15	1	50	125	105	LENNOX	TPA036H4-460	1,2
OU-C120	CLASSROOM	35,000	12.5	R-410A	460/3	8.1	15	1	50	125	105	LENNOX	TPA036H4-460	1,2
OU-C125	CLASSROOM	35,000	12.5	R-410A	460/3	8.1	15	1	50	125	105	LENNOX	TPA036H4-460	1,2
OU-C128	CLASSROOM	35,000	12.5	R-410A	460/3	8.1	15	1	50	125	105	LENNOX	TPA036H4-460	1,2
OU-C129	CLASSROOM	35,000	12.5	R-410A	460/3	8.1	15	1	50	125	105	LENNOX	TPA036H4-460	1,2
OU-D101	CLASSROOM	35,000	12.5	R-410A	460/3	8.1	15	1	50	125	105	LENNOX	TPA036H4-460	1,2
OU-D102	CLASSROOM	35,000	12.5	R-410A	460/3	8.1	15	1	50	125	105	LENNOX	TPA036H4-460	1,2
OU-D103	CLASSROOM	35,000	12.5	R-410A	460/3	8.1	15	1	50	125	105	LENNOX	TPA036H4-460	1,2
OU-D104	CLASSROOM	35,000	12.5	R-410A	460/3	8.1	15	1	50	125	105	LENNOX	TPA036H4-460	1,2
OU-D106	CORRIDOR	35,000	12.5	R-410A	460/3	8.1	15	1	50	125	105	LENNOX	TPA036H4-460	1,2
OU-D107	CLASSROOM	35,000	12.5	R-410A	460/3	8.1	15	1	50	125	105	LENNOX	TPA036H4-460	1,2
OU-D108	CLASSROOM	35,000	12.5	R-410A	460/3	8.1	15	1	50	125	105	LENNOX	TPA036H4-460	1,2
OU-D116	CLASSROOM	35,000	12.5	R-410A	460/3	8.1	15	1	50	125	105	LENNOX	TPA036H4-460	1,2
OU-D117	CLASSROOM	35,000	12.5	R-410A	460/3	8.1	15	1	50	125	105	LENNOX	TPA036H4-460	1,2
OU-D118	CLASSROOM	35,000	12.5	R-410A	460/3	8.1	15	1	50	125	105	LENNOX	TPA036H4-460	1,2
OU-D119	CLASSROOM	35,000	12.5	R-410A	460/3	8.1	15	1	50	125	105	LENNOX	TPA036H4-460	1,2
OU-D120	CLASSROOM	35,000	12.5	R-410A	460/3	8.1	15	1	50	125	105	LENNOX	TPA036H4-460	1,2
OU-D121	CORRIDOR	35,000	12.5	R-410A	460/3	8.1	15	1	50	125	105	LENNOX	TPA036H4-460	1,2
OU-C204	CLASSROOM	35,000	12.5	R-410A	460/3	8.1	15	1	50	125	105	LENNOX	TPA036H4-460	1,2
OU-C206	CLASSROOM	35,000	12.5	R-410A	460/3	8.1	15	1	50	125	105	LENNOX	TPA036H4-460	1,2
OU-C207	CLASSROOM	35,000	12.5	R-410A	460/3	8.1	15	1	50	125	105	LENNOX	TPA036H4-460	1,2
OU-C208	CLASSROOM	35,000	12.5	R-410A	460/3	8.1	15	1	50	125	105	LENNOX	TPA036H4-460	1,2
OU-C215	CLASSROOM	35,000	12.5	R-410A	460/3	8.1	15	1	50	125	105	LENNOX	TPA036H4-460	1,2
OU-C216	CLASSROOM	35,000	12.5	R-410A	460/3	8.1	15	1	50	125	105	LENNOX	TPA036H4-460	1,2
OU-C217	CLASSROOM	35,000	12.5	R-410A	460/3	8.1	15	1	50	125	105	LENNOX	TPA036H4-460	1,2
OU-C218	CLASSROOM	35,000	12.5	R-410A	460/3	8.1	15	1	50	125	105	LENNOX	TPA036H4-460	1,2
OU-C219	CLASSROOM	35,000	12.5	R-410A	460/3	8.1	15	1	50	125	105	LENNOX	TPA036H4-460	1,2
OU-C220	CLASSROOM	35,000	12.5	R-410A	460/3	8.1	15	1	50	125	105	LENNOX	TPA036H4-460	1,2
OU-C221	CLASSROOM	35,000	12.5	R-410A	460/3	8.1	15	1	50	125	105	LENNOX	TPA036H4-460	1,2
OU-C222	CLASSROOM	35,000	12.5	R-410A	460/3	8.1	15	1	50	125	105	LENNOX	TPA036H4-460	1,2
OU-C226	WORKROOM	35,000	12.5	R-410A	460/3	8.1	15	1	50	125	105	LENNOX	TPA036H4-460	1,2
OU-C227	CLASSROOM	35,000	12.5	R-410A	460/3	8.1	15	1	50	125	105	LENNOX	TPA036H4-460	1,2
OU-C228	CLASSROOM	35,000	12.5	R-410A	460/3	8.1	15	1	50	125	105	LENNOX	TPA036H4-460	1,2
OU-D201	CLASSROOM	35,000	12.5	R-410A	460/3	8.1	15	1	50	125	105	LENNOX	TPA036H4-460	1,2
OU-D202	CLASSROOM	35,000	12.5	R-410A	460/3	8.1	15	1	50	125	105	LENNOX	TPA036H4-460	1,2
OU-D203	CLASSROOM	35,000	12.5	R-410A	460/3	8.1	15	1	50	125	105	LENNOX	TPA036H4-460	1,2
OU-D204	CLASSROOM	35,000	12.5	R-410A	460/3	8.1	15	1	50	125	105	LENNOX	TPA036H4-460	1,2
OU-D207	CORRIDOR	35,000	12.5	R-410A	460/3	8.1	15	1	50	125	105	LENNOX	TPA036H4-460	1,2
OU-D208	CLASSROOM	35,000	12.5	R-410A	460/3	8.1	15	1	50	125	105	LENNOX	TPA036H4-460	1,2
OU-D214	CORRIDOR	35,000	12.5	R-410A	460/3	8.1	15	1	50	125	105	LENNOX	TPA036H4-460	1,2
OU-D215	CLASSROOM	35,000	12.5	R-410A	460/3	8.1	15	1	50	125	105	LENNOX	TPA036H4-460	1,2
OU-D216	CLASSROOM	35,000	12.5	R-410A	460/3	8.1	15	1	50	125	105	LENNOX	TPA036H4-460	1,2
OU-D217	CLASSROOM	35,000	12.5	R-410A	460/3	8.1	15	1	50	125	105	LENNOX	TPA036H4-460	1,2
OU-D218	CLASSROOM	35,000	12.5	R-410A	460/3	8.1	15	1	50	125	105	LENNOX	TPA036H4-460	1,2
OU-D220	CLASSROOM	35,000	12.5	R-410A	460/3	8.1	15	1	50	125	105	LENNOX	TPA036H4-460	1,2

NOTES:

1. PROVIDE FIELD MOUNTED CONDENSER COIL HAIL GUARDS.
2 PROVIDE LOW AMBIENT CONTROL FIELD INSTALLED.

AIR-COOLED CONDENSING UNIT SCHEDULE

MARK	SERVES	MIN. CAP BTUH	EER	REFR.	ELECTRICAL			COMPRESSOR		CONDENSER		MAKE	MODEL	NOTES
					VOLTS/ PH	MCA	MOCP	QTY.	MAX. SUCT. TEMP. F	MAX. COND. TEMP. F	AMBIENT TEMP. F			
OU-HRU-C1A	HRU-1	180,000	12.5	R-410A	460/3	33.0	40	1	50	125	105	LENNOX	TSA180S4D-460	1,2
OU-HRU-C1B	HRU-1	180,000	12.5	R-410A	460/3	33.0	40	1	50	125	105	LENNOX	TSA180S4D-460	1,2
OU-HRU-C2A	HRU-2	120,000	12.5	R-410A	460/3	21.0	25	1	50	125	105	LENNOX	TSA120S4D-460	1,2
OU-HRU-C2B	HRU-2	120,000	12.5	R-410A	460/3	21.0	25	1	50	125	105	LENNOX	TSA120S4D-460	1,2
OU-HRU-C3A	HRU-3	120,000	12.5	R-410A	460/3	21.0	25	1	50	125	105	LENNOX	TSA120S4D-460	1,2
OU-HRU-C3B	HRU-3	120,000	11.0	R-410A	460/3	21.0	25	1	50	125	105	LENNOX	TSA120S4D-460	1,2
OU-HRU-A1	HRU-A1 ADMIN	28,200	11.0	R-410A	208/1	18.7	30	1	50	125	105	LENNOX	13ACXN030-230	1,2
OU-HRU-A3	HRU-A3 MEDIA CTR	78,200	11.0	R-410A	460/3	17.0	25	1	50	125	105	LENNOX	TSA090S4S-460	1,2

NOTES:

1. PROVIDE FIELD MOUNTED CONDENSER COIL HAIL GUARDS.
2 PROVIDE LOW AMBIENT CONTROL FIELD INSTALLED.

FAN COIL UNIT - ELECTRIC HEAT SCHEDULE

MARK	SERVING	CONFIGURATION	TOTAL AIR CFM	OA CFM	EXT. SP. IN. H_2O	DRIVE TYPE	MOTOR HP	VOLTS/ PH	MCA	MOCP	COOLING COIL (DX)							HEATING (ELECTRICAL)		REMARKS
											EDB °F	EWB °F	MIN. GSH BTUH	MIN. GLH BTUH	MIN. GTH BTUH	MIN. # ROWS	MIN. FACE AREA SF	KW	MIN. # STAGES	
AHU-A1	ADMIN	HORIZ. DRAW-THRU	1,385	120	0.5	DIRECT	1	208/1	50	50	75°	63°	33,180	6,320	39,500	3	5.0	9.0	1	LENNOX CBX27UH-042, NOTES 1, 3
AHU-A2	ADMIN	HORIZ. DRAW-THRU	1,385	145	0.5	DIRECT	1	208/1	50	50	75°	63°	33,180	6,320	39,500	3	5.0	9.0	1	LENNOX CBX27UH-042, NOTES 1, 3
AHU-A3	ADMIN	HORIZ. DRAW-THRU	1,535	155	0.5	DIRECT	1	208/1	77	80	75°	63°	37,310	8,190	45,500	3	5.0	15.0	1	LENNOX CBX27UH-048, NOTES 1, 3
AHU-A4	ADMIN	HORIZ. DRAW-THRU	1,535	190	0.5	DIRECT	1	208/1	77	80	75°	63°	37,310	8,190	45,500	3	5.0	15.0	1	LENNOX CBX27UH-048, NOTES 1, 3
AHU-A5	MEDIA CTR	HORIZ. DRAW-THRU	1,385	370	0.5	DIRECT	1	208/1	50	50	75°	63°	33,180	6,320	39,500	3	5.0	9.0	1	LENNOX CBX27UH-042, NOTES 1,3
AHU-A6	MEDIA CTR	HORIZ. DRAW-THRU	6,000	735	0.5	BELT	5	460/3	81	90	75°	63°	128,160	49,840	178,000	3	5.0	50.0	1	LENNOX TAA180S4D-1G, NOTES 1,3
AHU-A7	CLASSROOM	HORIZ. DRAW-THRU	1,535	420	0.5	DIRECT	1	208/1	77	80	75°	63°	37,310	8,190	45,500	3	5.0	15.0	1	LENNOX CBX27UH-048, NOTES 1, 3
AHU-B1	MUSIC ROOM	VERT. DRAW-THRU	3,000	800	0.5	BELT	2	460/3	42	45	75°	63°	64,818	18,282	83,100	3	5.0	25.0	1	LENNOX TAA090S4D-1G, NOTES 1,2
AHU-B3	CAFETERIA	VERT. DRAW-THRU	6,000	1,185	0.5	BELT	5	460/3	81	90	75°	63°	128,160	49,840	178,000	3	5.0	50.0	1	LENNOX TAA180S4D-1G, NOTES 1,2
AHU-B4	CAFETERIA	VERT. DRAW-THRU	6,000	1,185	0.5	BELT	5	460/3	81	90	75°	63°	128,160	49,840	178,000	3	5.0	50.0	1	LENNOX TAA180S4D-1G, NOTES 1,2
FCU-A149-A	CORRIDOR	HORIZ. DRAW-THRU	1,170	390	0.5	DIRECT	1/3	208/1	40	40	75°	63°	24,606	10,194	34,800	3	5.0	8.0	1	FIRST CO. 36HX-C, NOTES 1,2
FCU-A149-B	CORRIDOR	HORIZ. DRAW-THRU	1,170	390	0.5	DIRECT	1/3	208/1	40	40	75°	63°	24,606	10,194	34,800	3	5.0	8.0	1	FIRST CO. 36HX-C, NOTES 1,2
FCU-C101	CORRIDOR	HORIZ. DRAW-THRU	1,170	390	0.5	DIRECT	1/3	208/1	40	40	75°	63°	24,606	10,194	34,800	3	5.0	8.0	1	FIRST CO. 36HX-C, NOTES 1,2
FCU-C108	CLASSROOMS	VERT. DRAW-THRU	1,250	390	0.5	DIRECT	1/2	230/1	47	50	75°	63°	26,712	5,088	31,800	3	5.0	8.0	1	LENNOX CBX27UH-036-230, NOTES 1,2
FCU-C110	CLASSROOMS	VERT. DRAW-THRU	1,250	390	0.5	DIRECT	1/2	230/1	47	50	75°	63°	26,712	5,088	31,800	3	5.0	8.0	1	LENNOX CBX27UH-036-230, NOTES 1,2
FCU-C111	CLASSROOMS	VERT. DRAW-THRU	1,250	390	0.5	DIRECT	1/2	230/1	47	50	75°	63°	26,712	5,088	31,800	3	5.0	8.0	1	LENNOX CBX27UH-036-230, NOTES 1,2
FCU-C112	CLASSROOMS	VERT. DRAW-THRU	1,250	390	0.5	DIRECT	1/2	230/1	47	50	75°	63°	26,712	5,088	31,800	3	5.0	8.0	1	LENNOX CBX27UH-036-230, NOTES 1,2
FCU-C113	CORRIDOR	HORIZ. DRAW-THRU	1,170	0	0.5	DIRECT	1/3	208/1	40	40	72°	60°	24,606	10,194	34,800	3	5.0	8.0	1	FIRST CO. 36HX-C, NOTES 1,2
FCU-C114	CLASSROOMS	VERT. DRAW-THRU	1,535	450	0.5	DIRECT	1	230/1	88	90	75°	63°	37,310	8,190	45,500	3	5.0	15.0	1	LENNOX CBX27UH-048, NOTES 1, 2
FCU-C117	CLASSROOMS	VERT. DRAW-THRU	1,250	390	0.5	DIRECT	1/2	230/1	47	50	75°	63°	26,712	5,088	31,800	3	5.0	8.0	1	LENNOX CBX27UH-036-230, NOTES 1,2
FCU-C118	CLASSROOMS	VERT. DRAW-THRU	1,250	390	0.5	DIRECT	1/2	230/1	47	50	75°	63°	26,712	5,088	31,800	3	5.0	8.0	1	LENNOX CBX27UH-036-230, NOTES 1,2
FCU-C119	CLASSROOMS	VERT. DRAW-THRU	1,250	390	0.5	DIRECT	1/2	230/1	47	50	75°	63°	26,712	5,088	31,800	3	5.0	8.0	1	LENNOX CBX27UH-036-230, NOTES 1,2
FCU-C120	CLASSROOMS	VERT. DRAW-THRU	1,250	390	0.5	DIRECT	1/2	230/1	47	50	75°	63°	26,712	5,088	31,800	3	5.0	8.0	1	LENNOX CBX27UH-036-230, NOTES 1,2
FCU-C125	CLASSROOMS	VERT. DRAW-THRU	1,250	390	0.5	DIRECT	1/2	230/1	47	50	75°	63°	26,712	5,088	31,800	3	5.0	8.0	1	LENNOX CBX27UH-036-230, NOTES 1,2
FCU-C128	CLASSROOMS	VERT. DRAW-THRU	1,250	390	0.5	DIRECT	1/2	230/1	47	50	75°	63°	26,712	5,088	31,800	3	5.0	8.0	1	LENNOX CBX27UH-036-230, NOTES 1,2
FCU-C129	CLASSROOMS	VERT. DRAW-THRU	1,250	390	0.5	DIRECT	1/2	230/1	47	50	75°	63°	26,712	5,088	31,800	3	5.0	8.0	1	LENNOX CBX27UH-036-230, NOTES 1,2
FCU-D101	CLASSROOMS	VERT. DRAW-THRU	1,250	390	0.5	DIRECT	1/2	230/1	47	50	75°	63°	26,712	5,088	31,800	3	5.0	8.0	1	LENNOX CBX27UH-036-230, NOTES 1,2
FCU-D102	CLASSROOMS	VERT. DRAW-THRU	1,250	390	0.5	DIRECT	1/2	230/1	47	50	75°	63°	26,712	5,088	31,800	3	5.0	8.0	1	LENNOX CBX27UH-036-230, NOTES 1,2
FCU-D103	CLASSROOMS	VERT. DRAW-THRU	1,250	390	0.5	DIRECT	1/2	230/1	47	50	75°	63°	26,712	5,088	31,800	3	5.0	8.0	1	LENNOX CBX27UH-036-230, NOTES 1,2
FCU-D104	CLASSROOMS	VERT. DRAW-THRU	1,250	390	0.5	DIRECT	1/2	230/1	47	50	75°	63°	26,712	5,088	31,800	3	5.0	8.0	1	LENNOX CBX27UH-036-230, NOTES 1,2
FCU-D106	CORRIDOR	HORIZ. DRAW-THRU	1,170	390	0.5	DIRECT	1/3	208/1	40	40	72°	60°	24,606	10,194	34,800	3	5.0	8.0	1	FIRST CO. 36HX-C, NOTES 1,2
FCU-D107	SPEECH ROOM	HORIZ. DRAW-THRU	1,170	390	0.5	DIRECT	1/3	208/1	40	40	72°	60°	24,606	10,194	34,800	3	5.0	8.0	1	FIRST CO. 36HX-C, NOTES 1,2
FCU-D108	CLASSROOMS	VERT. DRAW-THRU	1,250	390	0.5	DIRECT	1/2	230/1	47	50	75°	63°	26,712	5,088	31,800	3	5.0	8.0	1	LENNOX CBX27UH-036-230, NOTES 1,2
FCU-D116	CLASSROOMS	VERT. DRAW-THRU	1,250	390	0.5	DIRECT	1/2	230/1	47	50	75°	63°	26,712	5,088	31,800	3	5.0	8.0	1	LENNOX CBX27UH-036-230, NOTES 1,2
FCU-D117	CLASSROOMS	VERT. DRAW-THRU	1,250	390	0.5	DIRECT	1/2	230/1	47	50	75°	63°	26,712	5,088	31,800	3	5.0	8.0	1	LENNOX CBX27UH-036-230, NOTES 1,2
FCU-D118	CLASSROOMS	VERT. DRAW-THRU	1,250	390	0.5	DIRECT	1/2	230/1	47	50	75°	63°	26,712	5,088	31,800	3	5.0	8.0	1	LENNOX CBX27UH-036-230, NOTES 1,2
FCU-D119	CLASSROOMS	VERT. DRAW-THRU	1,250	390	0.5	DIRECT	1/2	230/1	47	50	75°	63°	26,712	5,088	31,800	3	5.0	8.0	1	LENNOX CBX27UH-036-230, NOTES 1,2
FCU-D120	CLASSROOMS	VERT. DRAW-THRU	1,250	180	0.5	DIRECT	1/2	230/1	47	50	75°	63°	26,712	5,088	31,800	3	5.0	8.0	1	LENNOX CBX27UH-036-230, NOTES 1,2
FCU-D121	CORRIDOR	HORIZ. DRAW-THRU	1,170	390	0.5	DIRECT	1/3	208/1	40	40	72°	60°	24,606	10,194	34,800	3	5.0	8.0	1	FIRST CO. 36HX-C, NOTES 1,2
FCU-C204	CLASSROOMS	VERT. DRAW-THRU	1,250	390	0.5	DIRECT	1/2	230/1	47	50	75°	63°	26,712	5,088	31,800	3	5.0	8.0	1	LENNOX CBX27UH-036-230, NOTES 1,2
FCU-C206	CLASSROOMS	VERT. DRAW-THRU	1,250	390	0.5	DIRECT	1/2	230/1	47	50	75°	63°	26,712	5,088	31,800	3	5.0	8.0	1	LENNOX CBX27UH-036-230, NOTES 1,2
FCU-C207	CLASSROOMS	VERT. DRAW-THRU	1,250	390	0.5	DIRECT	1/2	230/1	47	50	75°	63°	26,712	5,088	31,800	3	5.0	8.0	1	LENNOX CBX27UH-036-230, NOTES 1,2
FCU-C208	CLASSROOMS	VERT. DRAW-THRU	1,250	390	0.5	DIRECT	1/2	230/1	47	50	75°	63°	26,712	5,088	31,800	3	5.0	8.0	1	LENNOX CBX27UH-036-230, NOTES 1,2
FCU-C214	CORRIDOR	HORIZ. DRAW-THRU	1,170	390	0.5	DIRECT	1/3	208/1	40	40	72°	60°	24,606	10,194	34,800	3	5.0	8.0	1	FIRST CO. 36HX-C, NOTES 1,2
FCU-C215	CORRIDOR	HORIZ. DRAW-THRU	1,170	390	0.5	DIRECT	1/3	208/1	40	40	72°	60°	24,606	10,194	34,800	3	5.0	8.0	1	FIRST CO. 36HX-C, NOTES 1,2
FCU-C216	CLASSROOMS	VERT. DRAW-THRU	1,250	390	0.5	DIRECT	1/2	230/1	47	50	75°	63°	26,712	5,088	31,800	3	5.0	8.0	1	LENNOX CBX27UH-036-230, NOTES 1,2
FCU-C217	CLASSROOMS	VERT. DRAW-THRU	1,250	390	0.5	DIRECT	1/2	230/1	47	50	75°	63°	26,712	5,088	31,800	3	5.0	8.0	1	LENNOX CBX27UH-036-230, NOTES 1,2
FCU-C218	CLASSROOMS	VERT. DRAW-THRU	1,250	390	0.5	DIRECT	1/2	230/1	47	50	75°	63°	26,712	5,088	31,800	3	5.0	8.0	1	LENNOX CBX27UH-036-230, NOTES 1,2
FCU-C219	CLASSROOMS	VERT. DRAW-THRU	1,250	390	0.5	DIRECT	1/2	230/1	47	50	75°	63°	26,712	5,088	31,800	3	5.0	8.0	1	LENNOX CBX27UH-036-230, NOTES 1,2
FCU-C220	CLASSROOMS	VERT. DRAW-THRU	1,250	390	0.5	DIRECT	1/2	230/1	47	50	75°	63°	26,712	5,088	31,800	3	5.0	8.0	1	LENNOX CBX27UH-036-230, NOTES 1,2
FCU-C221	CLASSROOMS	VERT. DRAW-THRU	1,250	390	0.5	DIRECT	1/2	230/1	47	50	75°	63°	26,712	5,088	31,800	3	5.0	8.0	1	LENNOX CBX27UH-036-230, NOTES 1,2
FCU-C222	CLASSROOMS	VERT. DRAW-THRU	1,250	390	0.5	DIRECT	1/2	230/1	47	50	75°	63°	26,712	5,088	31,800	3	5.0	8.0	1	LENNOX CBX27UH-036-230, NOTES 1,2
FCU-C226	WORKROOM	HORIZ. DRAW-THRU	1,170	390	0.5	DIRECT	1/3	208/1	40	40	72°	60°	24,606	10,194	34,800	3	5.0	8.0	1	FIRST CO. 36HX-C, NOTES 1,2
FCU-C227	CLASSROOMS	VERT. DRAW-THRU	1,250	390	0.5	DIRECT	1/2	230/1	47	50	75°	63°	26,712	5,088	31,800	3	5.0	8.0	1	LENNOX CBX27UH-036-230, NOTES 1,2
FCU-C228	CLASSROOMS	VERT. DRAW-THRU	1,250	390	0.5	DIRECT	1/2	230/1	47	50	75°	63°	26,712	5,088	31,800	3	5.0	8.0	1	LENNOX CBX27UH-036-230, NOTES 1,2
FCU-D201	CLASSROOMS	VERT. DRAW-THRU	1,250	390	0.5	DIRECT	1/2	230/1	47	50	75°	63°	26,712	5,088	31,800	3	5.0	8.0	1	LENNOX CBX27UH-036-230, NOTES 1,2
FCU-D202	CLASSROOMS	VERT. DRAW-THRU	1,250	390	0.5	DIRECT	1/2	230/1	47	50	75°	63°	26,712	5,088	31,800	3	5.0	8.0	1	LENNOX CBX27UH-036-230, NOTES 1,2
FCU-D203	CLASSROOMS	VERT. DRAW-THRU	1,250	390	0.5	DIRECT	1/2	230/1	47	50	75°	63°	26,712	5,088	31,800	3	5.0	8.0	1	LENNOX CBX27UH-036-230, NOTES 1,2
FCU-D204	CLASSROOMS	VERT. DRAW-THRU	1,250	390	0.5	DIRECT	1/2	230/1	47	50	75°	63°	26,712	5,088	31,800	3	5.0	8.0	1	LENNOX CBX27UH-036-230, NOTES 1,2
FCU-D207	CORRIDOR	HORIZ. DRAW-THRU	1,170	390	0.5	DIRECT	1/3	208/1	40	40	72°	60°	24,606	10,194	34,800	3	5.0	8.0	1	FIRST CO. 36HX-C, NOTES 1,2
FCU-D208	CLASSROOMS	VERT. DRAW-THRU	1,250	390	0.5	DIRECT	1/2	230/1	47	50	75°	63°	26,712	5,088	31,800	3	5.0	8.0	1	LENNOX CBX27UH-036-230, NOTES 1,2
FCU-D214	CORRIDOR	HORIZ. DRAW-THRU	1,170	390	0.5	DIRECT	1/3	208/1	40	40	72°	60°	24,606	10,194	34,800	3	5.0	8.0	1	FIRST CO. 36HX-C, NOTES 1,2
FCU-D215	CLASSROOMS	VERT. DRAW-THRU	1,250	390	0.5	DIRECT	1/2	230/1	47	50	75°	63°	26,712	5,088	31,800	3	5.0	8.0	1	LENNOX CBX27UH-036-230, NOTES 1,2
FCU-D216	CLASSROOMS	VERT. DRAW-THRU	1,250	390	0.5	DIRECT	1/2	230/1	47	50	75°	63°	26,712	5,088	31,800	3	5.0	8.0	1	LENNOX CBX27UH-036-230, NOTES 1,2
FCU-D217	CLASSROOMS	VERT. DRAW-THRU	1,250	390	0.5	DIRECT	1/2	230/1	47	50	75°	63°	26,712	5,088	31,800	3	5.0	8.0	1	LENNOX CBX27UH-036-230, NOTES 1,2
FCU-D218	CLASSROOMS	VERT. DRAW-THRU	1,250	390	0.5	DIRECT	1/2	230/1	47	50	75°	63°	26,712	5,088	31,800	3	5.0	8.0	1	LENNOX CBX27UH-036-230, NOTES 1,2
FCU-D220	CLASSROOMS	VERT. DRAW-THRU	1,250	180	0.5	DIRECT	1/2	230/1	47	50	75°	63°	26,712	5,088	31,800	3	5.0	8.0	1	LENNOX CBX27UH-036-230, NOTES 1,2

NOTES:

1. PROVIDE AIR HANDLING UNITS WITH SINGLE SOURCE ELECTRICAL CONNECTION.
2. OA SUPPLIED DIRECTLY TO SPACE FROM HRU U.O.N.
2. OA SUPPLIED TO RA OF UNIT FROM HRU.

Plot Time: 2/8/2017 6:10:28 PM – Plotted By: ALEX MEANS

TBPE Registered Engineering Firm F-342

MEP ENGINEERING, INC.

9830 Colonnade Blvd.
Suite 230
San Antonio, TX 78230
(210) 349-1400

1120 Capital of Texas Hwy, South
Building 1, Suite 150
Austin, TX 78746
(512) 306-9650

RANDY C. FUSTON
92454
2.08.17

EANES INDEPENDENT SCHOOL DISTRICT

BRIDGE POINT ELEMENTARY - HVAC RENOVATION

6401 CEDAR STREET, AUSTIN, TX 78746

DATE	REVISION
02/08/17	ADDENDUM #1

DRAWN BY: AM
PROJECT NO.: 39602
DATE: 2/8/2017
CHECKED BY: RCF
SHEET:

M0.2

39602 M0 MECH Legend and Sched

SCHEDULES - HVAC

HEAT RECOVERY UNIT - HEAT WHEEL - ELECTRIC HEAT SCHEDULE

MARK	SERVING	CONFIG.	AIR PATH	FAN CFM	FAN EXT. SP IN. H2O	FAN TOTAL SP IN. H2O	FAN DRIVE TYPE	FAN GREENHECK FAN #	FAN MOTOR HP	ELECTRICAL VOLTS/PH	ELECTRICAL FLA	ELECTRICAL MCA	ELECTRICAL MOCP	HEAT WHEEL WHEEL CFM	HEAT WHEEL EDB °F	HEAT WHEEL EWB °F	HEAT WHEEL LDB °F	HEAT WHEEL LWB °F	HEAT WHEEL PURGE CFM	HEAT WHEEL P.D. IN.	ROTOR SOURCE #	COOLING COIL (DX) COIL CFM	COIL EDB °F	COIL EWB °F	COIL LDB °F	COIL LWB °F	COIL MBH TOTAL	COIL MBH SENS.	ROW	FREE AREA	P.D. IN.	ELECTRIC HEATING EAT °F	EAT LAT °F	PANEL SIZE	KW HEATER	APPROX. WEIGHT Lbs.	NOTES
HRU-1	AREA C	HORIZONTAL	OA	8553	1.25	3.6	DIRECT	24-APH-4-90-II-100	10	460/3			100	8000	98	78	81.9	67.2	221	0.93	TA3C-66-200	8000	81.9	67.2	54	53.5	310	232	6	NOTE 11	0.75	62.3	72.4	36X20	40	11,000	1,2,3,4,5,6,10
			EXH	7653	1	2.15	DIRECT	22-APH-4-85-I-75	7.5					7100	76	63	94.8	73.8	--	0.77																		
HRU-2	AREA C/D	HORIZONTAL	OA	6034	1.25	3.6	DIRECT	22-APH-4-70-I-75	7.5	460/3	45	51	80	5600	98	78	81.8	67.1	179	0.8	TA3C-60-200	5600	81.8	67.1	54.7	52	209	160	6	NOTE 12	0.75	65.2	72.4	60X45	28	8,700	1,2,3,4,5,6,10
			EXH	5134	1	2.15	DIRECT	20-APH-4-90-I-50	5					4700	76	63	94.8	73.8	--	0.67																		
HRU-3	AREA D	HORIZONTAL	OA	6452	1.25	3.6	DIRECT	22-APH-4-70-I-75	7.5	460/3	45	51	80	6000	98	78	81.5	66.9	179	0.86	TA3C-60-200	6000	81.5	66.9	54.4	52.6	224	172	6	NOTE 12	0.75	65.2	72	60X45	28	8,700	1,2,3,4,5,6,10
			EXH	5852	1	2.4	DIRECT	20-APH-4-90-I-50	5					5400	76	63			--	0.77																		
HRU-A1	ADMIN	HORIZONTAL	OA	550	0.5	0.7	DIRECT	N/A	0.33	115/1		16.2	20	550	98	78	83.9	69.5	--	0.1	N/A	550	83.9	69.5	55	54.5	26.5	17.2	6	1.2	0.2	55	55		-	300	2,3,7,9,10
			EXH	400	0.5	0.5	DIRECT	N/A	0.33					400	76	63	--	--	--																		
HRU-A3	ADMIN	HORIZONTAL	OA	1550	0.5	0.9	DIRECT	N/A	1.00	208/3		26.8	30	1550	98	78	81.6	68	--	0.4	N/A	1500	81.6	68	52	51.5	78.2	50.4	6	3.25	0.4	55	67.1		4.2	1,400	2,3,7,8,10
			EXH	1400	0.5	0.8	DIRECT	N/A	1.00					1400	94.2	76.1	--	--	--																		

NOTES:
1. EXISTING SEMCO CASING TO BE REUSED. ALL COMPONENTS (FANS, COILS, ELECTRIC STRIP HEATERS, ENTHALPY WHEEL, AND CONTROLS) TO BE REPLACED. REFER TO DIVISION 23 74 18.
2. FURNISH W/ FARR 30/30 2 INCH FILTERS OR EQUIVALENT.
3. FURNISH WITH TWO SPARE SETS OF FILTERS.
4. SUPPLY UNIT WITH A ROTOR SOURCE HEAT WHEEL.
5. FURNISH WITH ELECTRIC HEATING COIL WITH SCR CONTROL.
6. PROVIDE VARIABLE SPEED DRIVES FOR SUPPLY AND EXHAUST FANS.
7. NEW ENERGY RECOVERY VENTILATOR. REFER TO DIVISION 23 74 23.
8. FURNISH WITH FACTORY COIL.
9. FURNISH WITH EXTERNAL HORIZONTAL COIL EQUAL TO LENNOX MODEL #CH33-19A-2F.
10. SELECT COIL AND CORRESPONDING UNIT.
11. COIL DIMENSIONS: 42" X 33" (QTY 2) INTERLACED, 10 FPI, 9 SF/COIL FREE AREA
12. COIL DIMENSIONS: 42" X 27" (QTY 2) INTERLACED, 10 FPI, 6.5 SF/COIL FREE AREA

OUTSIDE AIR UNIT SCHEDULE

MARK	CONFIGURATION	VALENT MODEL #	FAN OA AIR CFM	FAN EXT. SP IN. H2O	FAN DRIVE TYPE	FAN MOTOR BHP	FAN MOTOR HP	COOLING COIL (DX) EDB °F	EWB °F	LDB °F	LWB °F	MIN. GSH BTUH	MIN. GLH BTUH	MIN. GTH BTUH	MIN. # ROWS	MIN. FACE AREA SF	HGRH COIL EDB °F	EWB °F	LDB °F	LWB °F	CAP MBH	HEATING NATURAL GAS MBH INPUT	MBH OUTPUT	TEMP RISE°F	TURN DOWN	ELECTRICAL VOLTS/PH	MCA	MOCP	WEIGHT	REMARKS
OAU-1	SIDE DISCHARGE	VPR-210-25C-301-C-3DX	3800	1.0	DIRECT	2 @ 1.1	2 @ 1 1/2	98	78	56.8	56.5	172.8	126.7	299.5	6	14.4	56.8	56.5	78.5	64.5	105.0	300.0	240	58	4:01	460/3	58.6	80	3140	1,2,3,4,5,6,7,8,9,10,11,12,13

NOTES:
1. VALENT IS BASIS OF DESIGN
2. FURNISH W/ SINGLE POINT POWER CONNECTIONS W/ BREAKER STYLE DISCONNECT SWITCH.
3. FURNISH W/ FARR 30/30 MERV 8, 2 INCH FILTERS OR EQUIVALENT.
4. PAD MOUNTED UNIT WITH SIDE DISCHARGE.
5. ALL SUPPLY FANS SHALL BE IN THE DRAW THRU POSITION.
6. PROVIDE UNIT WITH STAND ALONE CONTROLLER WITH BACNET COMMUNICATIONS.
7. PROVIDE UNIT WITH TWO SETS OF TANDOM STANDARD SCROLL COMPRESSORS FOR FOUR STAGES OF COOLING.
8. PROVIDE VARIABLE SPEED DRIVES FOR SUPPLY AND EXHAUST FANS.
9. PROVIDE UNIT WITH GFCI, 120 VOLT POWER SUPPLIED BY THE UNIT MANUFACTURE.
10. CONDENSER AMBIENT TEMPERATURE TO BE 105 F.
11. 98/78 O/A CONDITIONS & 76/63 R/A CONDITIONS.
12. PROVIDE UNIT WITH AIRFLOW MONITORING STATION.
13. PROVIDE UNIT WITH A 12" HIGH PAD MOUNTED CURB.

DIFFUSER & GRILLE SCHEDULE

MARK	CFM RANGE	S	R	E	TYPE	DUCT CONN. SIZE	PATTERN	REMARKS
A	0 - 150	X			LAY-IN	6ø	4-WAY	TITUS TDC, 24X24 MODULE
B	151 - 250	X			LAY-IN	8ø	4-WAY	TITUS TDC, 24X24 MODULE
C	251 - 400	X			LAY-IN	10ø	4-WAY	TITUS TDC, 24X24 MODULE
D	401 - 600	X			LAY-IN	12ø	4-WAY	TITUS TDC, 24X24 MODULE
F	601 - 800	X			LAY-IN	14ø	4-WAY	TITUS TDC, 24X24 MODULE
G	0 -150	X			SURFACE	6ø	4-WAY	TITUS TDC
H	151 - 250	X			SURFACE	8ø	4-WAY	TITUS TDC
J	251 - 400	X			SURFACE	10ø	4-WAY	TITUS TDC
K	401 - 600	X			SURFACE	12ø	4-WAY	TITUS TDC
L	350 - 450	X			LAY-IN	12ø	4-WAY	TITUS PAS, 24X24 MODULE
M	800 - 1100	X			SURFACE	14ø	4-WAY	TITUS OMNI
N	450 - 650	X			SIDEWALL	18X16	2-WAY	TITUS 300RS
P	400 - 650	X			SIDEWALL	14X14	2-WAY	TITUS 300RS
Q	1000 - 1400		X		SIDEWALL	20X20	N.A.	TITUS 350RL
R	400 - 650		X		SIDEWALL	14X14	N.A.	TITUS 350RL
S	0 - 500		X		CEILING	22X10 (10ø oval)	N.A.	TITUS 350ZRL
T	301 - 1200		X		CEILING	22X22 (18ø)	N.A.	TITUS 350ZRL
U	3000 - 4500		X		CEILING	48X24	N.A.	TITUS 350ZRS
V	500 - 600	X			CEILING	14ø	N.A.	TITUS TMR
W	5500 - 6500		X		SIDEWALL	48X48	N.A.	TITUS 350ZRL
X	0 -450			X	SURFACE	10X10	N.A.	TITUS 350RL
Y	451 - 1000			X	SURFACE	16X16	N.A.	TITUS 350RL
Z	0 - 1000		X		DOOR	24X24	N.A.	TITUS T700

NOTES:
1. ALL AIR FLOWS ARE LISTED IN CFM; ALL SIZES IN INCHES.
2. FURNISH DEVICES WITH A FRAME COMPATIBLE WITH THE CEILING OR WALL IN WHICH THE DEVICE IS
3. MAKE RUNOUT AND FLEX OR HARD DUCT CONNECTION TO AIR DEVICE SAME SIZE AS SCHEDULED DUCT
4. FURNISH ROUND-TO-SQUARE TRANSITION AS REQUIRED BY DUCT CONNECTION SIZE. (TYPES A-K)
5. EQUIVALENT MODELS BY KRUEGER, METALAIRE, OR PRICE MAY BE ACCEPTABLE PENDING SUBMITTAL

A.100 LETTER INDICATES AIR DEVICE MARK, NUMBER INDICATES DESIGN

SINGLE PACKAGED AIR CONDITIONING UNIT W/ GAS HEAT SCHEDULE

MARK	SERVING	NOMINAL TONS	REFRIG.	VOLTS/PH	MCA / MOCP	SEER / EER	COMPRESSOR NO.	COMPRESSOR MAX. SUCT °F	CONDENSER MAX. COND °F	CONDENSER EAT °F	FAN TOTAL CFM	FAN OA CFM	FAN EXT SP IN. H_2O	FAN MOTOR HP	FAN DRIVE TYPE	COOLING COIL EDB °F	EWB °F	MIN. GSH BTUH	MIN. GLH BTUH	MIN. GTH BTUH	MIN. # ROWS	HEATING (NATURAL GAS) INPUT BTUH	MIN. EFFIC.	MIN. # STAGES	REMARKS
RTU-1A	GYM	15	R-410	460/3	36 / 40	12.0	3	50°	125°	102°	6,000	760	0.75	3	BELT	72°	60°	134,472	37,928	172,400	3	208,000	80%	1	NOTES 1,2,3,4,5,6,7
RTU-1B	GYM	15	R-410	460/3	36 / 40	12.0	3	50°	125°	102°	6,000	760	0.75	3	BELT	72°	60°	134,472	37,928	172,400	3	208,000	80%	1	NOTES 1,2,3,4,5,6,7
RTU-2	RESTROOMS	5	R-410	460/3	13.5 / 20	12.2 / 14	1	50°	125°	102°	2,000	100	0.75	1	BELT	75°	63°	44,400	15,100	59,500	3	108,000	80%	2	NOTES 1,2,3,4,5,6,7

NOTES:
1. PROVIDE WITH FUSED DISCONNECT SWITCH.
2. CAPACITIESE ARE NET A.R.I. CONDITIONS.
3. PROVIDE WITH 37" HIGH ROOF CURB FOR DOWNDISCHARGE. PROVIDE 14" HIGH ROOF CURB FOR SIDE DISCHARGE.
4. PROVIDE UNIT WITH POWERED 120V CONVENIENCE OUTLET AND INTEGRAL TRANSFORMER TO PROVIDE 120V FROM 460/3 PHASE ELECTRICAL CONNECTION.
5. PROVIDE WITH HINGED ACCESS DOORS, 2" FILTER FRAME.
6. PROVIDE UNIT WITH FACTORY MOUNTED SINGLE STAGE ENTHALPY ECONOMIZER
7. PROVIDE UNIT WITH A HOT GAS REHEAT COIL.

TBPE Registered Engineering Firm F-542
MWE NGINEERING, INC.
1120 Capital of Texas Hwy South
Building 1, Suite 150
Austin, TX 78746
(512) 330-9630
MEP
9630 Coloma Dr. Blvd.
Suite 120
Austin, TX 78729
(210) 589-4401

STATE OF TEXAS
RANDY C. FUSTON
92454
LICENSED
PROFESSIONAL ENGINEER

EANES INDEPENDENT SCHOOL DISTRICT
BRIDGE POINT ELEMENTARY - HVAC RENOVATION
6401 CEDAR STREET, AUSTIN, TX 78746

DATE	REVISION
02/08/17	ADDENDUM #1

DRAWN BY: AM
PROJECT NO.: 39602
DATE: 2/9/2017
CHECKED BY: RCF
SHEET:
M0.3

39602-M0 MECH Legend and Sched

Plot Time: 2/9/2017 6:43:23 PM – Plotted By: RANDY FUSTON

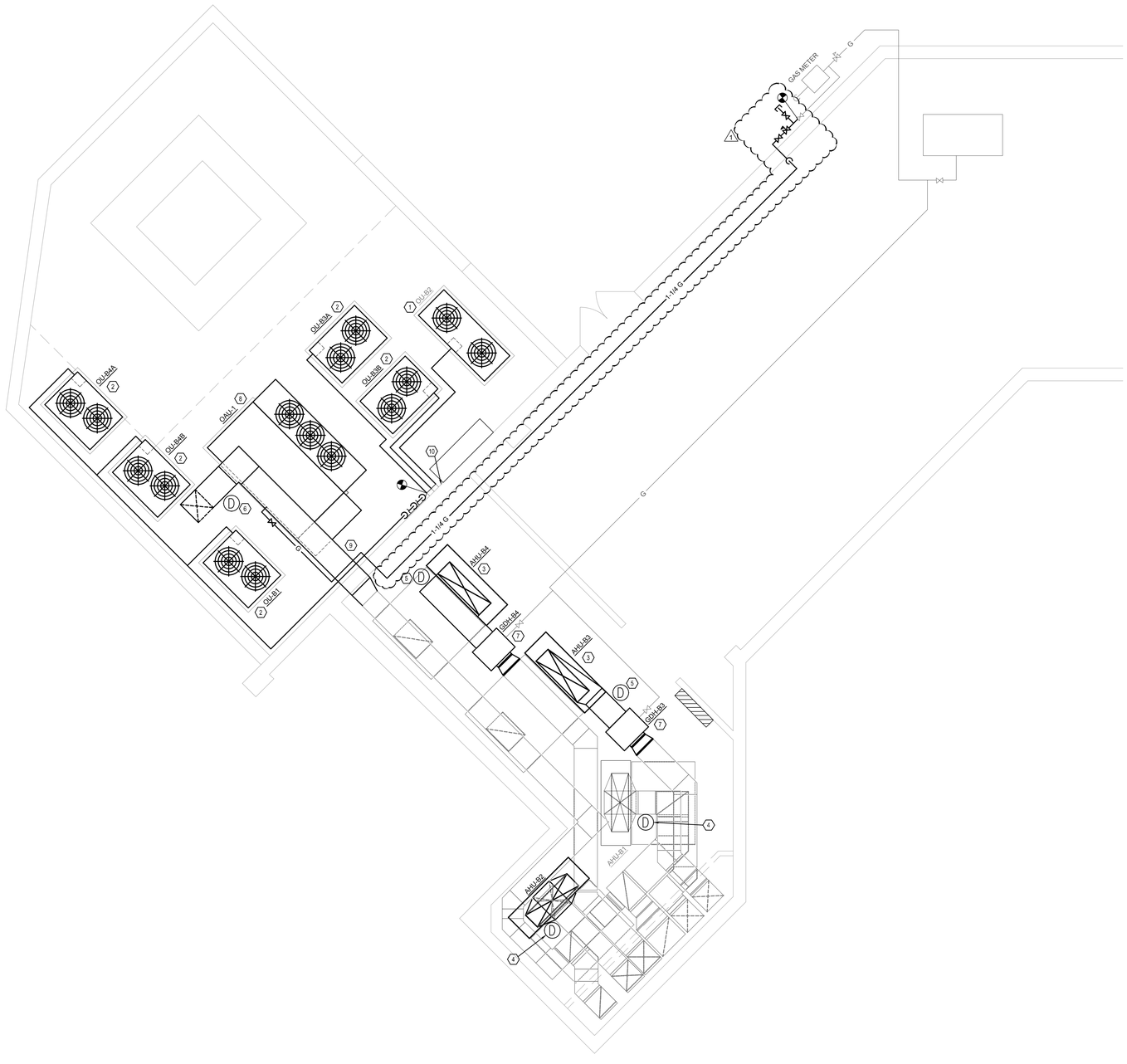

1 BASEMENT LEVEL - AREA B MECHANICAL ROOM PLAN
SCALE: 1/4" = 1'-0"

GENERAL NOTES (HVAC)

1. REFER TO M0.1 FOR LEGEND, ABBREVIATIONS, & GENERAL MECHANICAL NOTES. REFER TO DIVISION 23 SPECIFICATIONS. REFER TO DETAIL SHEETS FOR ADDITIONAL INSTALLATION INSTRUCTIONS.
2. MOST VOLUME DAMPERS ARE NOT INDICATED ON THE DRAWINGS. INSTALL VOLUME DAMPERS IN EXH, OA, SA, & RA DUCTS AT ALL BRANCHES AND TAPS UNLESS OTHERWISE INDICATED. INSTALL VOLUME DAMPERS IN RETURN AIR TAPS ONLY ON RETURN AIR TAPS WHERE RETURN AIR GRILLES EXIST ON SAME RETURN AIR DUCT RUN IN MORE THAN ONE SEPARATE ROOM OR ARE SHOWN AT A GREATER DISTANCE THAN 20 FEET APART. INSTALL VOLUME DAMPERS IN ACCESSIBLE LOCATION FROM BELOW CEILING. RE: ?/M6.? AND ?/M6.? FOR TAP AND FLEX INSTALLATION DETAILS.
3. MAKE DUCT TAPS, RUNOUTS, & FLEX DUCT CONNECTIONS TO AIR DEVICES SAME SIZE AS DUCT CONNECTION SIZE INDICATED ON DIFFUSER & GRILLE SCHEDULE UNLESS OTHERWISE INDICATED.
4. ALL DUCT DIMENSIONS INDICATED ARE CLEAR INSIDE DIMENSIONS. CONSTRUCT ALL DUCTWORK DOWNSTREAM OF TERMINAL UNITS TO SMACNA 2 IN. PRESSURE CLASSIFICATION UNLESS OTHERWISE INDICATED. SEAL ALL DUCTWORK TO SMACNA TYPE A SEAL CLASS UNLESS OTHERWISE INDICATED.
5. FLEX DUCT INSTALL IN LENGTHS NOT TO EXCEED 6 FT.
6. COORDINATE EXACT LOCATION OF AIR DEVICES WITH ARCHITECT PRIOR TO INSTALLATION. SHIFT AIR DEVICES AS REQUIRED TO FIT WITHIN ROOMS. MODIFY DUCTWORK ARRANGEMENT AS REQUIRED TO LOCATE DIFFUSERS.
7. COORDINATE LOCATION OF WALL-MOUNTED CONTROLS WITH ARCHITECT PRIOR TO ROUGH-IN AND INSTALL PER DETAIL UNLESS OTHERWISE INDICATED.
8. DO NOT RUN AIR HANDLERS OR FANS UNTIL ALL INTERIOR CLEANING IS COMPLETE. CLEAN OR REPLACE ANY EQUIPMENT, DUCTWORK, ETC., WHICH IS FOULED DUE TO PAINT OR CONSTRUCTION DEBRIS.
9. COORDINATE LOCATION OF FLOOR PENETRATIONS WITH STRUCTURAL FRAMING PRIOR TO START OF STRUCTURAL ERECTION. SHIFT JOIST LOCATIONS W/IN ALLOWABLE LIMITS OF STRUCTURAL DRAWINGS, MODIFY CROSS-SECTION OF DUCTWORK (MAINTAINING CROSS-SECTIONAL AREA), OR PROPOSE ALTERNATE SOLUTION IN THE EVENT AN INTERFERENCE IS DISCOVERED, AS A PART OF THE WORK.

KEYED NOTES

1. EXISTING HEAT PUMP RELOCATED. INSTALL CONCRETE PAD AT NEW LOCATION. EXTEND REFRIGERANT PIPING TO NEW LOCATION. RE: 3/M5.1.
2. NEW HEAT PUMP UNIT. INSTALL CONCRETE PAD AT NEW LOCATION. EXTEND REFRIGERANT PIPING TO NEW LOCATION. RE: 3/M5.1.
3. NEW AIR HANDLING UNIT. CONNECT TO EXISTING SUPPLY AND RETURN DUCT. CONNECT TO EXISTING REFRIGERATION PIPING AND CONDENSATE DRAIN.
4. EXISTING DUCT SMOKE DETECTOR TO REMAIN.
5. EXISTING DUCT SMOKE DETECTOR TO BE REINSTALLED IN NEW DUCTWORK.
6. NEW DUCT SMOKE DETECTOR.
7. NEW GAS DUCT HEATER. INSTALL IN DUCTWORK. CONNECT TO EXISTING GAS PIPING AND VENT.
8. NEW OUTSIDE AIR UNIT. INSTALL CONCRETE PAD AT NEW LOCATION. INSTALL NEW GAS LINE FROM BUILDING TO UNIT. INSTALL CONDENSATE DRAIN FROM OA UNIT THROUGH WALL TO FD IN MECHANICAL ROOM.
9. INSTALL NEW OA SUPPLY DUCT FROM UNIT TO EXISTING OA DUCT THROUGH WALL. SEAL NEW DUCT PENETRATION IN WALL.
10. INSTALL 90° ELBOW IN DUCT HEATER VENTS AND EXTEND UP WALL 8 FEET.
11. INSTALL NEW 1-1/4 GAS LINE FROM EXISTING VALVE AT MAIN. ROUTE THRU WALL AND BELOW MECHANICAL ROOM CEILING AS SHOWN. RE: 9/M5.1.

TBPE Registered Engineering Firm F-542
MEP ENGINEERING, INC.
1120 Capital of Texas Hwy South
Building 1, Suite 150
Austin, TX 78746
(512) 330-9630
9503 Colonnade Blvd.
Suite 230
Frisco, Texas 75033
(281) 589-4401

STATE OF TEXAS
RANDY C. FUSTON
92454
LICENSED
PROFESSIONAL ENGINEER

EANES INDEPENDENT SCHOOL DISTRICT
BRIDGE POINT ELEMENTARY - HVAC RENOVATION
6401 CEDAR STREET, AUSTIN, TX 78746

DATE	REVISION
02/08/17	ADDENDUM #1

DRAWN BY: AM
PROJECT NO.: 39602
DATE: 2/8/2017
CHECKED BY: RCF
SHEET:
M3.0

TRUE NORTH
PLAN NORTH

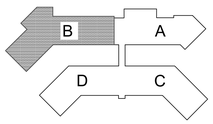

KEYPLAN
NOT TO SCALE

BASEMENT LEVEL - AREA B MECH RM PLAN - NEW - HVAC

Plot Time: 2/8/2017 6:10:49 PM – Plotted By: ALEX MEANS

39602 M3 MECH NEW Level 1 Floor Plan

GENERAL NOTES (HVAC)

1. REFER TO M0.1 FOR LEGEND, ABBREVIATIONS, & GENERAL MECHANICAL NOTES. REFER TO DIVISION 23 SPECIFICATIONS. REFER TO DETAIL SHEETS FOR ADDITIONAL INSTALLATION INSTRUCTIONS.
2. MOST VOLUME DAMPERS ARE NOT INDICATED ON THE DRAWINGS. INSTALL VOLUME DAMPERS IN EXH, OA, SA, & RA DUCTS AT ALL BRANCHES AND TAPS UNLESS OTHERWISE INDICATED. INSTALL VOLUME DAMPERS IN RETURN AIR TAPS ONLY ON RETURN AIR TAPS WHERE RETURN AIR GRILLES EXIST ON SAME RETURN AIR DUCT RUN IN MORE THAN ONE SEPARATE ROOM OR ARE SHOWN AT A GREATER DISTANCE THAN 20 FEET APART. INSTALL VOLUME DAMPERS IN ACCESSIBLE LOCATION FROM BELOW CEILING. RE: ?/M6.7 AND ?/M6.7 FOR TAP AND FLEX INSTALLATION DETAILS.
3. MAKE DUCT TAPS, RUNOUTS, & FLEX DUCT CONNECTIONS TO AIR DEVICES SAME SIZE AS DUCT CONNECTION SIZE INDICATED ON DIFFUSER & GRILLE SCHEDULE UNLESS OTHERWISE INDICATED.
4. ALL DUCT DIMENSIONS INDICATED ARE CLEAR INSIDE DIMENSIONS. CONSTRUCT ALL DUCTWORK DOWNSTREAM OF TERMINAL UNITS TO SMACNA 2 IN. PRESSURE CLASSIFICATION UNLESS OTHERWISE INDICATED. SEAL ALL DUCTWORK TO SMACNA TYPE A SEAL CLASS UNLESS OTHERWISE INDICATED.
5. FLEX DUCT INSTALL IN LENGTHS NOT TO EXCEED 6 FT.
6. COORDINATE EXACT LOCATION OF AIR DEVICES WITH ARCHITECT PRIOR TO INSTALLATION. SHIFT AIR DEVICES AS REQUIRED TO FIT WITHIN ROOMS. MODIFY DUCTWORK ARRANGEMENT AS REQUIRED TO LOCATE DIFFUSERS.
7. COORDINATE LOCATION OF WALL-MOUNTED CONTROLS WITH ARCHITECT PRIOR TO ROUGH-IN AND INSTALL PER DETAIL UNLESS OTHERWISE INDICATED.
8. DO NOT RUN AIR HANDLERS OR FANS UNTIL ALL INTERIOR CLEANING IS COMPLETE. CLEAN OR REPLACE ANY EQUIPMENT, DUCTWORK, ETC., WHICH IS FOULED DUE TO PAINT OR CONSTRUCTION DEBRIS.
9. COORDINATE LOCATION OF FLOOR PENETRATIONS WITH STRUCTURAL FRAMING PRIOR TO START OF STRUCTURAL ERECTION. SHIFT JOIST LOCATIONS W/IN ALLOWABLE LIMITS OF STRUCTURAL DRAWINGS, MODIFY CROSS-SECTION OF DUCTWORK (MAINTAINING CROSS-SECTIONAL AREA), OR PROPOSE ALTERNATE SOLUTION IN THE EVENT AN INTERFERENCE IS DISCOVERED, AS A PART OF THE WORK.

KEYED NOTES

1. FURNISH AND INSTALL NEW FCU AS SCHEDULED IN CLOSET. MOUNT FCU ON PLATFORM MIN. 30" A.F.F. RE: ARCH FOR CLOSET INFORMATION. FURNISH AND INSTALL RETURN AIR FILTER RACK AT BOTTOM OF FCU. PROVIDE NEW SUPPLY DUCTWORK AS SHOWN. COORDINATE WITH STRUCTURE. RETURN AIR GRILLE IN WALL OF MECHANICAL CLOSET. CONNECT NEW REFRIGERANT LINES ROUTED FROM OUTSIDE CONDENSING UNIT.
2. PIPE CONDENSATE DRAIN THROUGH WALL AND DOWN TO PERIMETER FRENCH DRAIN.
3. FURNISH AND INSTALL NEW FCU CONDENSING UNIT AS SCHEDULED. MOUNT UNIT ON NEW CONCRETE CONDENSING UNIT PAD. ROUTE NEW REFRIGERANT LINES TO BUILDING ON TOP OF NEW CONCRETE PAD, RE: ?/M5.1, THROUGH WALL TO NEW FCU.
4. FURNISH AND INSTALL NEW HRU CONDENSING UNIT AS SCHEDULED. MOUNT UNIT ON NEW CONCRETE CONDENSING UNIT PAD. ROUTE NEW REFRIGERANT LINES TO BUILDING ON TOP OF NEW CONCRETE PAD, RE: ?/M5.1, AND UP WALL INSIDE PIPING ENCLOSURE. RE: ARCH.
5. PIPE CONDENSATE DRAIN THROUGH WALL AND DOWN TO EXISTING DRYWELL.
6. FURNISH AND INSTALL NEW FCU AS SCHEDULED ABOVE CEILING. SUSPEND FROM STRUCTURE WITH VIBRATION ISOLATION AS SPECIFIED. RECONNECT TO EXISTING SUPPLY AND RETURN DUCTWORK. RECONNECT TO EXISTING CONDENSATE DRAIN AND REFRIGERANT LINES.
7. EXISTING MECHANICAL EQUIPMENT TO REMAIN.
8. INSTALL NEW CONCRETE CONDENSING UNIT PADS UP TO BUILDING.
9. BALANCE EXISTING DEVICES AS SHOWN.
10. NEW THERMOSTAT/CO2 SENSOR/HUMIDISTAT TYPICAL, RE: 6/M5.1.

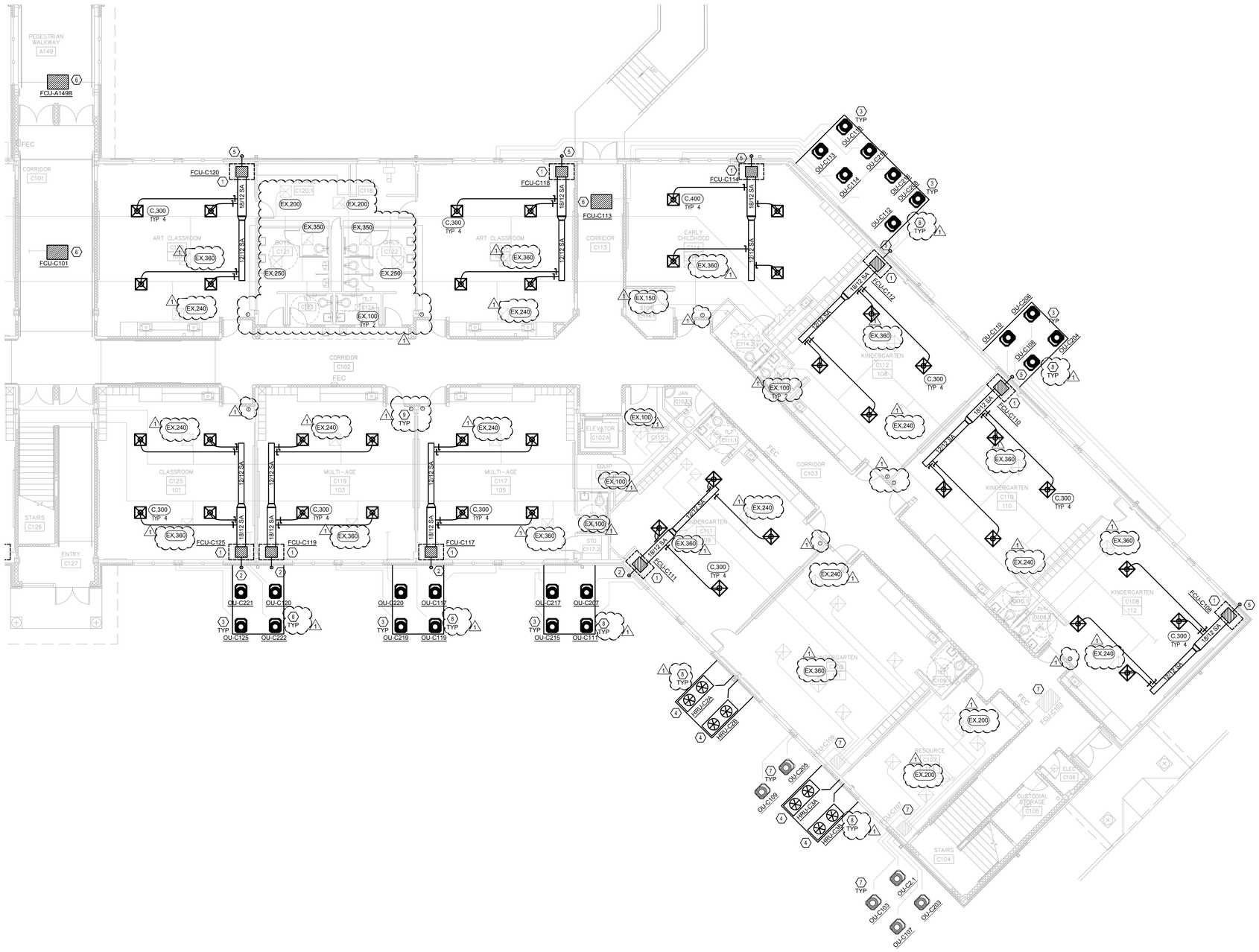

1 LEVEL 1 - AREA C MECHANICAL PLAN
SCALE: 1/8" = 1'-0"

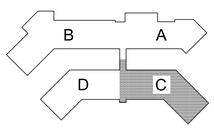

TRUE NORTH
PLAN NORTH

KEYPLAN
NOT TO SCALE

TBPE Registered Engineering Firm F-342
MENGINEERING, INC
1120 Capital of Texas Hwy South
Building 1, Suite 150
Austin, TX 78746
(512) 330-9630
9503 Colonnade Blvd.
Suite 230
Austin, TX 78729
(210) 349-4401

STATE OF TEXAS
RANDY C. FUSTON
92454
LICENSED PROFESSIONAL ENGINEER

EANES INDEPENDENT SCHOOL DISTRICT
BRIDGE POINT ELEMENTARY - HVAC RENOVATION
6401 CEDAR STREET, AUSTIN, TX 78746

DATE	REVISION
02/08/17	ADDENDUM #1

DRAWN BY: AM
PROJECT NO.: 39602
DATE: 2/8/2017
CHECKED BY: RCF
SHEET:
M3.3

39602 M3 MECH NEW Level 1 Floor Plan

LEVEL 1 - AREA C PLAN - NEW - HVAC

Plot Time: 2/9/2017 6:10:53 PM -- Plotted By: ALEX MEANS

GENERAL NOTES (HVAC)

1. REFER TO M0.1 FOR LEGEND, ABBREVIATIONS, & GENERAL MECHANICAL NOTES. REFER TO DIVISION 23 SPECIFICATIONS. REFER TO DETAIL SHEETS FOR ADDITIONAL INSTALLATION INSTRUCTIONS.
2. MOST VOLUME DAMPERS ARE NOT INDICATED ON THE DRAWINGS. INSTALL VOLUME DAMPERS IN EXH, OA, SA, & RA DUCTS AT ALL BRANCHES AND TAPS UNLESS OTHERWISE INDICATED. INSTALL VOLUME DAMPERS IN RETURN AIR TAPS ONLY ON RETURN AIR TAPS WHERE RETURN AIR GRILLES EXIST ON SAME RETURN AIR DUCT RUN IN MORE THAN ONE SEPARATE ROOM OR ARE SHOWN AT A GREATER DISTANCE THAN 20 FEET APART. INSTALL VOLUME DAMPERS IN ACCESSIBLE LOCATION FROM BELOW CEILING. RE: ?/M6.7 AND ?/M6.7 FOR TAP AND FLEX INSTALLATION DETAILS.
3. MAKE DUCT TAPS, RUNOUTS, & FLEX DUCT CONNECTIONS TO AIR DEVICES SAME SIZE AS DUCT CONNECTION SIZE INDICATED ON DIFFUSER & GRILLE SCHEDULE UNLESS OTHERWISE INDICATED.
4. ALL DUCT DIMENSIONS INDICATED ARE CLEAR INSIDE DIMENSIONS. CONSTRUCT ALL DUCTWORK DOWNSTREAM OF TERMINAL UNITS TO SMACNA 2 IN. PRESSURE CLASSIFICATION UNLESS OTHERWISE INDICATED. SEAL ALL DUCTWORK TO SMACNA TYPE A SEAL CLASS UNLESS OTHERWISE INDICATED.
5. FLEX DUCT INSTALL IN LENGTHS NOT TO EXCEED 6 FT.
6. COORDINATE EXACT LOCATION OF AIR DEVICES WITH ARCHITECT PRIOR TO INSTALLATION. SHIFT AIR DEVICES AS REQUIRED TO FIT WITHIN ROOMS. MODIFY DUCTWORK ARRANGEMENT AS REQUIRED TO LOCATE DIFFUSERS.
7. COORDINATE LOCATION OF WALL-MOUNTED CONTROLS WITH ARCHITECT PRIOR TO ROUGH-IN AND INSTALL PER DETAIL UNLESS OTHERWISE INDICATED.
8. DO NOT RUN AIR HANDLERS OR FANS UNTIL ALL INTERIOR CLEANING IS COMPLETE. CLEAN OR REPLACE ANY EQUIPMENT, DUCTWORK, ETC., WHICH IS FOULED DUE TO PAINT OR CONSTRUCTION DEBRIS.
9. COORDINATE LOCATION OF FLOOR PENETRATIONS WITH STRUCTURAL FRAMING PRIOR TO START OF STRUCTURAL ERECTION. SHIFT JOIST LOCATIONS W/IN ALLOWABLE LIMITS OF STRUCTURAL DRAWINGS, MODIFY CROSS-SECTION OF DUCTWORK (MAINTAINING CROSS-SECTIONAL AREA), OR PROPOSE ALTERNATE SOLUTION IN THE EVENT AN INTERFERENCE IS DISCOVERED, AS A PART OF THE WORK.

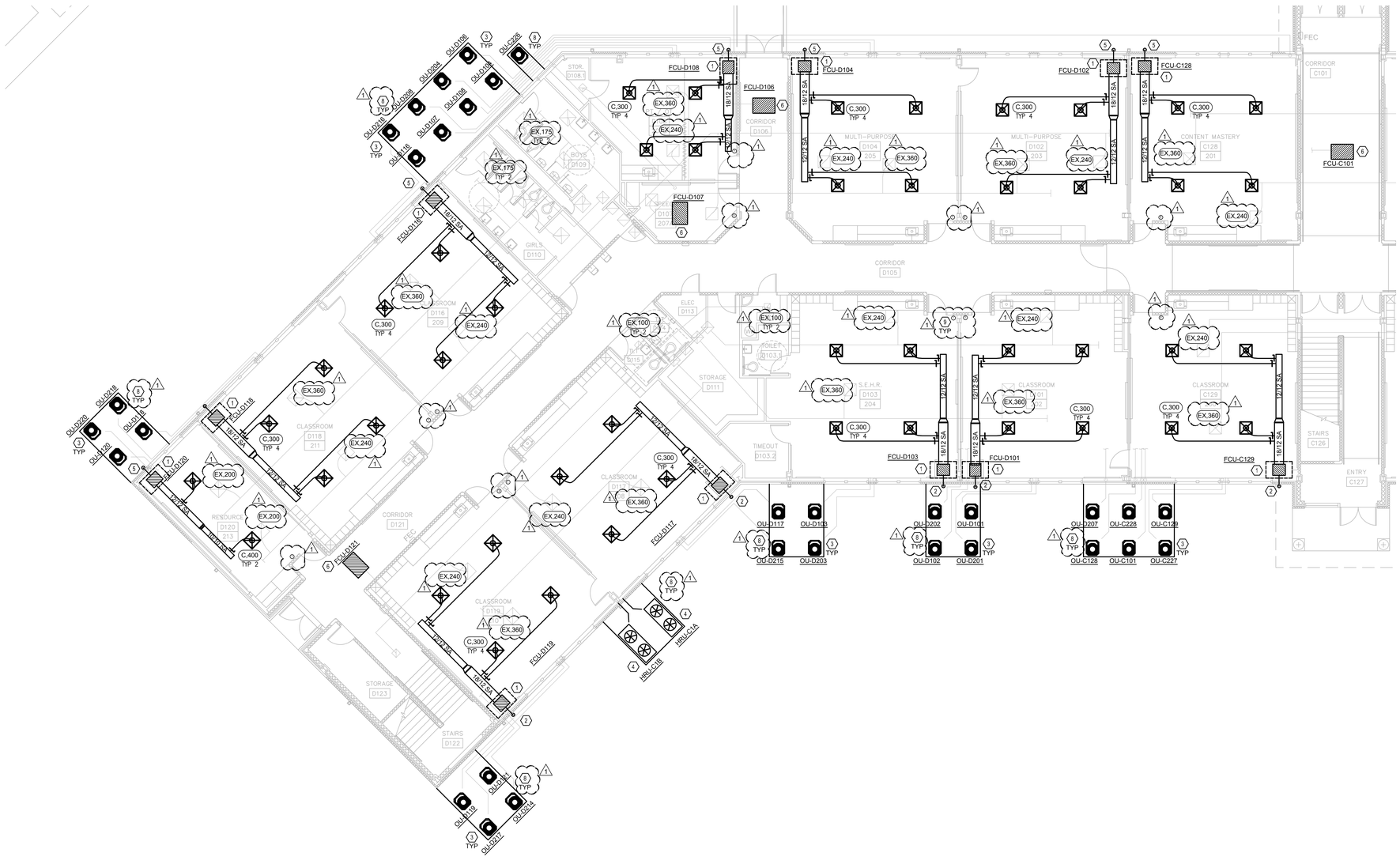

1 LEVEL 1 - AREA D MECHANICAL PLAN
SCALE: 1/8" = 1'-0"

KEYED NOTES

1. FURNISH AND INSTALL NEW FCU AS SCHEDULED IN CLOSET. MOUNT FCU ON PLATFORM MIN. 30" A.F.F. RE: ARCH FOR CLOSET INFORMATION. FURNISH AND INSTALL RETURN AIR FILTER RACK AT BOTTOM OF FCU. PROVIDE NEW SUPPLY DUCTWORK AS SHOWN. COORDINATE WITH STRUCTURE. RETURN AIR GRILLE IN WALL OF MECHANICAL CLOSET. CONNECT NEW REFRIGERANT LINES ROUTED FROM OUTSIDE CONDENSING UNIT.
2. PIPE CONDENSATE DRAIN THROUGH WALL AND DOWN TO PERIMETER FRENCH DRAIN.
3. FURNISH AND INSTALL NEW FCU CONDENSING UNIT AS SCHEDULED. MOUNT UNIT ON NEW CONCRETE CONDENSING UNIT PAD. ROUTE NEW REFRIGERANT LINES TO BUILDING ON TOP OF NEW CONCRETE PAD, RE: 7/M5.1, THROUGH WALL TO NEW FCU.
4. FURNISH AND INSTALL NEW HRU CONDENSING UNIT AS SCHEDULED. MOUNT UNIT ON NEW CONCRETE CONDENSING UNIT PAD. ROUTE NEW REFRIGERANT LINES TO BUILDING ON TOP OF NEW CONCRETE PAD, RE: 7/M5.1, AND UP WALL INSIDE PIPING ENCLOSURE. RE: ARCH.
5. PIPE CONDENSATE DRAIN THROUGH WALL AND DOWN TO EXISTING DRYWELL.
6. FURNISH AND INSTALL NEW FCU AS SCHEDULED ABOVE CEILING. SUSPEND FROM STRUCTURE WITH VIBRATION ISOLATION AS SPECIFIED, RECONNECT TO EXISTING SUPPLY AND RETURN DUCTWORK. RECONNECT TO EXISTING CONDENSATE DRAIN AND REFRIGERANT LINES.
7. EXISTING MECHANICAL EQUIPMENT TO REMAIN.
8. INSTALL NEW CONCRETE CONDENSING UNIT PADS UP TO BUILDING.
9. BALANCE EXISTING DEVICES AS SHOWN.
10. NEW THERMOSTAT/CO2 SENSOR/HUMIDISTAT TYPICAL, RE: 6/M5.1.

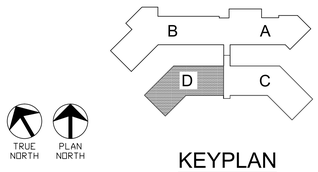

KEYPLAN
NOT TO SCALE

TBPE Registered Engineering Firm F-342
MEP ENGINEERING, INC.
1120 Capital of Texas Hwy South
Building 1, Suite 150
Austin, TX 78746
(512) 330-9630
9503 Colonnade Blvd.
Suite 230
Austin, TX 78729
(210) 349-4401

STATE OF TEXAS
RANDY C. FUSTER
92454
LICENSED
PROFESSIONAL ENGINEER

EANES INDEPENDENT SCHOOL DISTRICT
BRIDGE POINT ELEMENTARY - HVAC RENOVATION
6401 CEDAR STREET, AUSTIN, TX 78746

DATE	REVISION
02/08/17	ADDENDUM #1

DRAWN BY: AM
PROJECT NO.: 39602
DATE: 2/8/2017
CHECKED BY: RCF
SHEET:
M3.4

39602 M3 MECH NEW Level 1 Floor Plan

LEVEL 1 - AREA D PLAN - NEW - HVAC

Plot Time: 2/8/2017 6:10:36 PM – Plotted By: ALEX MEANS

GENERAL NOTES (HVAC)

1. REFER TO M0.1 FOR LEGEND, ABBREVIATIONS, & GENERAL MECHANICAL NOTES. REFER TO DIVISION 23 SPECIFICATIONS. REFER TO DETAIL SHEETS FOR ADDITIONAL INSTALLATION INSTRUCTIONS.
2. MOST VOLUME DAMPERS ARE NOT INDICATED ON THE DRAWINGS. INSTALL VOLUME DAMPERS IN EXH, OA, SA, & RA DUCTS AT ALL BRANCHES AND TAPS UNLESS OTHERWISE INDICATED. INSTALL VOLUME DAMPERS IN RETURN AIR TAPS ONLY ON RETURN AIR TAPS WHERE RETURN AIR GRILLES EXIST ON SAME RETURN AIR DUCT RUN IN MORE THAN ONE SEPARATE ROOM OR ARE SHOWN AT A GREATER DISTANCE THAN 20 FEET APART. INSTALL VOLUME DAMPERS IN ACCESSIBLE LOCATION FROM BELOW CEILING. RE: ?/M6.7 AND ?/M6.7 FOR TAP AND FLEX INSTALLATION DETAILS.
3. MAKE DUCT TAPS, RUNOUTS, & FLEX DUCT CONNECTIONS TO AIR DEVICES SAME SIZE AS DUCT CONNECTION SIZE INDICATED ON DIFFUSER & GRILLE SCHEDULE UNLESS OTHERWISE INDICATED.
4. ALL DUCT DIMENSIONS INDICATED ARE CLEAR INSIDE DIMENSIONS. CONSTRUCT ALL DUCTWORK DOWNSTREAM OF TERMINAL UNITS TO SMACNA 2 IN. PRESSURE CLASSIFICATION, AND ALL UPSTREAM OF TERMINAL UNITS TO SMACNA 6 IN. PRESSURE CLASSIFICATION UNLESS OTHERWISE INDICATED. SEAL ALL DUCTWORK TO SMACNA TYPE A SEAL CLASS UNLESS OTHERWISE INDICATED.
5. FLEX DUCT INSTALL IN LENGTHS NOT TO EXCEED 6 FT.
6. COORDINATE EXACT LOCATION OF AIR DEVICES WITH ARCHITECT PRIOR TO INSTALLATION. SHIFT AIR DEVICES AS REQUIRED TO FIT WITHIN ROOMS. MODIFY DUCTWORK ARRANGEMENT AS REQUIRED TO LOCATE DIFFUSERS.
7. COORDINATE LOCATION OF WALL-MOUNTED CONTROLS WITH ARCHITECT PRIOR TO ROUGH-IN AND INSTALL PER DETAIL UNLESS OTHERWISE INDICATED.
8. DO NOT RUN AIR HANDLERS OR FANS UNTIL ALL INTERIOR CLEANING IS COMPLETE. CLEAN OR REPLACE ANY EQUIPMENT, DUCTWORK, ETC., WHICH IS FOULED DUE TO PAINT OR CONSTRUCTION DEBRIS.
9. COORDINATE LOCATION OF FLOOR PENETRATIONS WITH STRUCTURAL FRAMING PRIOR TO START OF STRUCTURAL ERECTION. SHIFT JOIST LOCATIONS W/IN ALLOWABLE LIMITS OF STRUCTURAL DRAWINGS. MODIFY CROSS-SECTION OF DUCTWORK (MAINTAINING CROSS-SECTIONAL AREA), OR PROPOSE ALTERNATE SOLUTION IN THE EVENT AN INTERFERENCE IS DISCOVERED, AS A PART OF THE WORK.

KEYED NOTES

1. FURNISH AND INSTALL NEW FCU AS SCHEDULED IN CLOSET. MOUNT FCU ON PLATFORM MIN. 30" A.F.F. RE: ARCH FOR CLOSET INFORMATION. FURNISH AND INSTALL RETURN AIR FILTER RACK AT BOTTOM OF FCU. PROVIDE NEW SUPPLY DUCTWORK AS SHOWN. COORDINATE WITH STRUCTURE. RETURN AIR GRILLE IN WALL OF MECHANICAL CLOSET. CONNECT NEW REFRIGERANT LINES ROUTED FROM OUTSIDE CONDENSING UNIT. CONNECT NEW CONDENSATE DRAIN PIPE TO EXISTING CONDENSATE NETWORK IN GENERAL VICINITY. CEILING.
2. FURNISH AND INSTALL NEW FCU AS SCHEDULED ABOVE CEILING. SUSPEND FROM STRUCTURE WITH VIBRATION ISOLATION AS SPECIFIED. FURNISH AND INSTALL NEW SUPPLY AND RETURN DUCTWORK AS SHOWN. RECONNECT TO EXISTING CONDENSATE DRAIN AND REFRIGERANT LINES.
3. EXISTING MECHANICAL EQUIPMENT TO REMAIN.
4. NEW THERMOSTAT/CO2 SENSOR/HUMIDISTAT TYPICAL. RE: 6/M5.1.

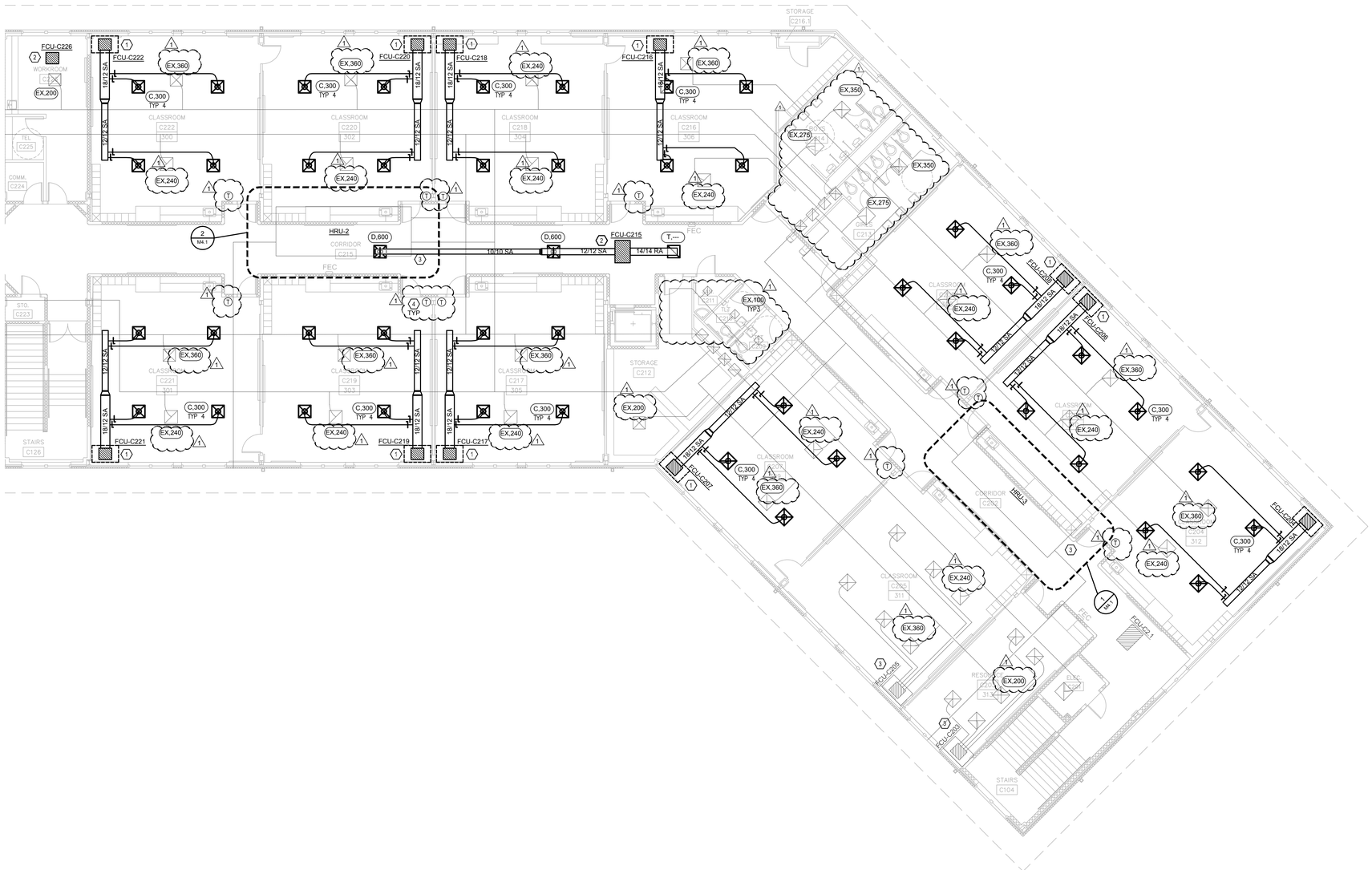

1 LEVEL 2 - AREA C MECHANICAL PLAN
SCALE: 1/8" = 1'-0"

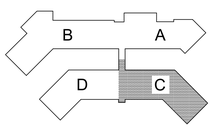

TRUE NORTH
PLAN NORTH

KEYPLAN
NOT TO SCALE

LEVEL 2 - AREA C PLAN - NEW - HVAC

TBPE Registered Engineering Firm F-542
MEP ENGINEERING, INC.
1120 Capital of Texas Hwy South
Building 1, Suite 150
Austin, TX 78746
(512) 330-9630
9503 Colonial Blvd.
Suite 120
Austin, TX 78729
(210) 349-4401

STATE OF TEXAS
RANDY C. FUSTON
92454
LICENSED PROFESSIONAL ENGINEER

EANES INDEPENDENT SCHOOL DISTRICT

BRIDGE POINT ELEMENTARY - HVAC RENOVATION

6401 CEDAR STREET, AUSTIN, TX 78746

DATE	REVISION
02/08/17	ADDENDUM #1

DRAWN BY: AM
PROJECT NO.: 39602
DATE: 2/8/2017
CHECKED BY: RCF
SHEET:

M3.5

39602 M3 MECH NEW Level 2 Floor Plan

Plot Time: 2/8/2017 6:11:07 PM -- Plotted By: ALEX MEANS

GENERAL NOTES (HVAC)

1. REFER TO M0.1 FOR LEGEND, ABBREVIATIONS, & GENERAL MECHANICAL NOTES. REFER TO DIVISION 23 SPECIFICATIONS. REFER TO DETAIL SHEETS FOR ADDITIONAL INSTALLATION INSTRUCTIONS.
2. MOST VOLUME DAMPERS ARE NOT INDICATED ON THE DRAWINGS. INSTALL VOLUME DAMPERS IN EXH, OA, SA, & RA DUCTS AT ALL BRANCHES AND TAPS UNLESS OTHERWISE INDICATED. INSTALL VOLUME DAMPERS IN RETURN AIR TAPS ONLY ON RETURN AIR TAPS WHERE RETURN AIR GRILLES EXIST ON SAME RETURN AIR DUCT RUN IN MORE THAN ONE SEPARATE ROOM OR ARE SHOWN AT A GREATER DISTANCE THAN 20 FEET APART. INSTALL VOLUME DAMPERS IN ACCESSIBLE LOCATION FROM BELOW CEILING. RE: ?/M6.7 AND ?/M6.7 FOR TAP AND FLEX INSTALLATION DETAILS.
3. MAKE DUCT TAPS, RUNOUTS, & FLEX DUCT CONNECTIONS TO AIR DEVICES SAME SIZE AS DUCT CONNECTION SIZE INDICATED ON DIFFUSER & GRILLE SCHEDULE UNLESS OTHERWISE INDICATED.
4. ALL DUCT DIMENSIONS INDICATED ARE CLEAR INSIDE DIMENSIONS. CONSTRUCT ALL DUCTWORK DOWNSTREAM OF TERMINAL UNITS TO SMACNA 2 IN. PRESSURE CLASSIFICATION, AND ALL UPSTREAM OF TERMINAL UNITS TO SMACNA 6 IN. PRESSURE CLASSIFICATION UNLESS OTHERWISE INDICATED. SEAL ALL DUCTWORK TO SMACNA TYPE A SEAL CLASS UNLESS OTHERWISE INDICATED.
5. FLEX DUCT INSTALL IN LENGTHS NOT TO EXCEED 6 FT.
6. COORDINATE EXACT LOCATION OF AIR DEVICES WITH ARCHITECT PRIOR TO INSTALLATION. SHIFT AIR DEVICES AS REQUIRED TO FIT WITHIN ROOMS. MODIFY DUCTWORK ARRANGEMENT AS REQUIRED TO LOCATE DIFFUSERS.
7. COORDINATE LOCATION OF WALL-MOUNTED CONTROLS WITH ARCHITECT PRIOR TO ROUGH-IN AND INSTALL PER DETAIL UNLESS OTHERWISE INDICATED.
8. DO NOT RUN AIR HANDLERS OR FANS UNTIL ALL INTERIOR CLEANING IS COMPLETE. CLEAN OR REPLACE ANY EQUIPMENT, DUCTWORK, ETC., WHICH IS FOULED DUE TO PAINT OR CONSTRUCTION DEBRIS.
9. COORDINATE LOCATION OF FLOOR PENETRATIONS WITH STRUCTURAL FRAMING PRIOR TO START OF STRUCTURAL ERECTION. SHIFT JOIST LOCATIONS W/IN ALLOWABLE LIMITS OF STRUCTURAL DRAWINGS. MODIFY CROSS-SECTION OF DUCTWORK (MAINTAINING CROSS-SECTIONAL AREA), OR PROPOSE ALTERNATE SOLUTION IN THE EVENT AN INTERFERENCE IS DISCOVERED, AS A PART OF THE WORK.

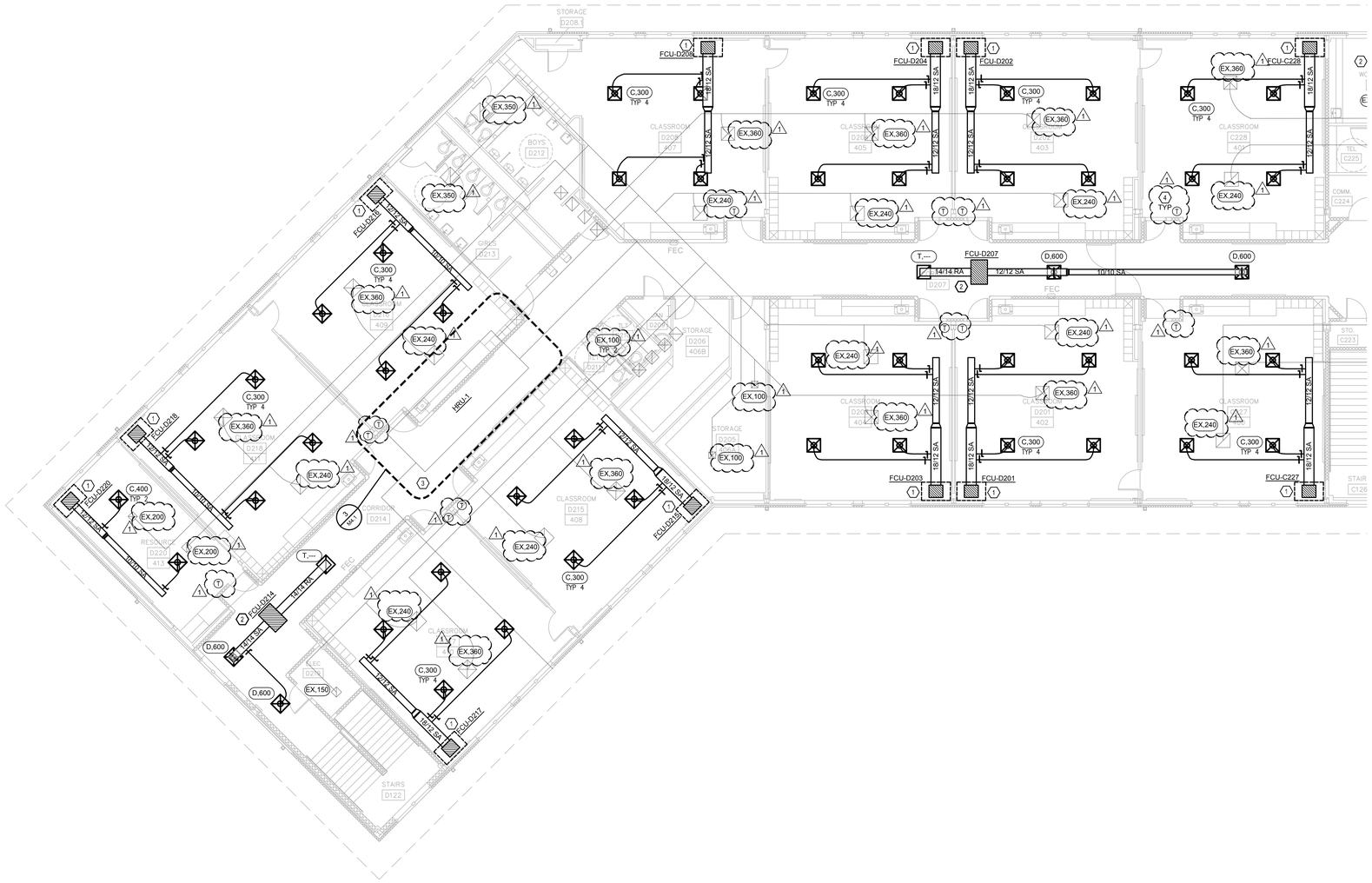

1 LEVEL 2 - AREA D MECHANICAL PLAN
SCALE: 1/8" = 1'-0"

KEYED NOTES

1. FURNISH AND INSTALL NEW FCU AS SCHEDULED IN CLOSET. MOUNT FCU ON PLATFORM MIN. 30" A.F.F. RE: ARCH FOR CLOSET INFORMATION. FURNISH AND INSTALL RETURN AIR FILTER RACK AT BOTTOM OF FCU. PROVIDE NEW SUPPLY DUCTWORK AS SHOWN. COORDINATE WITH STRUCTURE. RETURN AIR GRILLE IN WALL OF MECHANICAL CLOSET. CONNECT NEW REFRIGERANT LINES ROUTED FROM OUTSIDE CONDENSING UNIT. CONNECT NEW CONDENSATE DRAIN PIPE TO EXISTING CONDENSATE NETWORK IN GENERAL VICINITY. CEILING.
2. FURNISH AND INSTALL NEW FCU AS SCHEDULED ABOVE CEILING. SUSPEND FROM STRUCTURE WITH VIBRATION ISOLATION AS SPECIFIED. FURNISH AND INSTALL NEW SUPPLY AND RETURN DUCTWORK AS SHOWN. RECONNECT TO EXISTING CONDENSATE DRAIN AND REFRIGERANT LINES.
3. EXISTING MECHANICAL EQUIPMENT TO REMAIN.
4. NEW THERMOSTAT/CO2 SENSOR/HUMIDISTAT TYPICAL. RE: 6/M5.1.

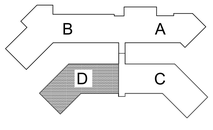

TRUE NORTH
PLAN NORTH

KEYPLAN
NOT TO SCALE

TBPE Registered Engineering Firm F-542
MEP ENGINEERING, INC.
1120 Capital of Texas Hwy South
Building 1, Suite 150
Austin, TX 78746
(512) 330-9630
9503 Colonial Blvd.
Suite 120
Fort Worth, TX 76129
(817) 589-9401

STATE OF TEXAS
RANDY C. FUSTON
92454
LICENSED
PROFESSIONAL ENGINEER

EANES INDEPENDENT SCHOOL DISTRICT
BRIDGE POINT ELEMENTARY - HVAC RENOVATION
6401 CEDAR STREET, AUSTIN, TX 78746

DATE	REVISION
02/08/17	ADDENDUM #1

DRAWN BY: AM
PROJECT NO.: 39602
DATE: 2/8/2017
CHECKED BY: RCF
SHEET:
M3.6

LEVEL 2 - AREA D PLAN - NEW - HVAC

Plot Time: 2/8/2017 6:11:10 PM -- Plotted By: ALEX MEANS

39602 M3 MECH NEW Level 2 Floor Plan

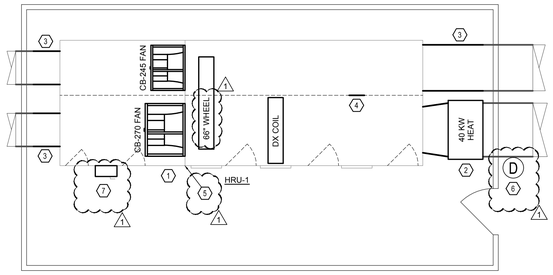

1 AREA D MECHANICAL PLAN - HRU-1 - NEW
SCALE: 1/4" = 1'-0"

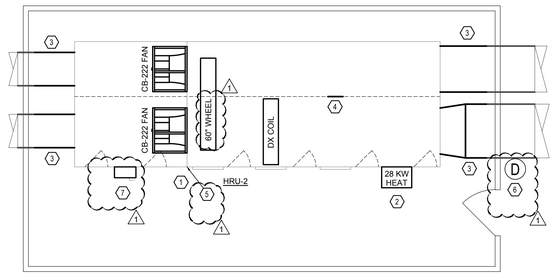

2 AREA C MECHANICAL PLAN - HRU-2 - NEW
SCALE: 1/4" = 1'-0"

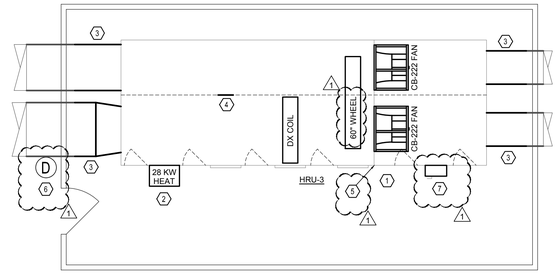

3 AREA C MECHANICAL PLAN - HRU-3 - NEW
SCALE: 1/4" = 1'-0"

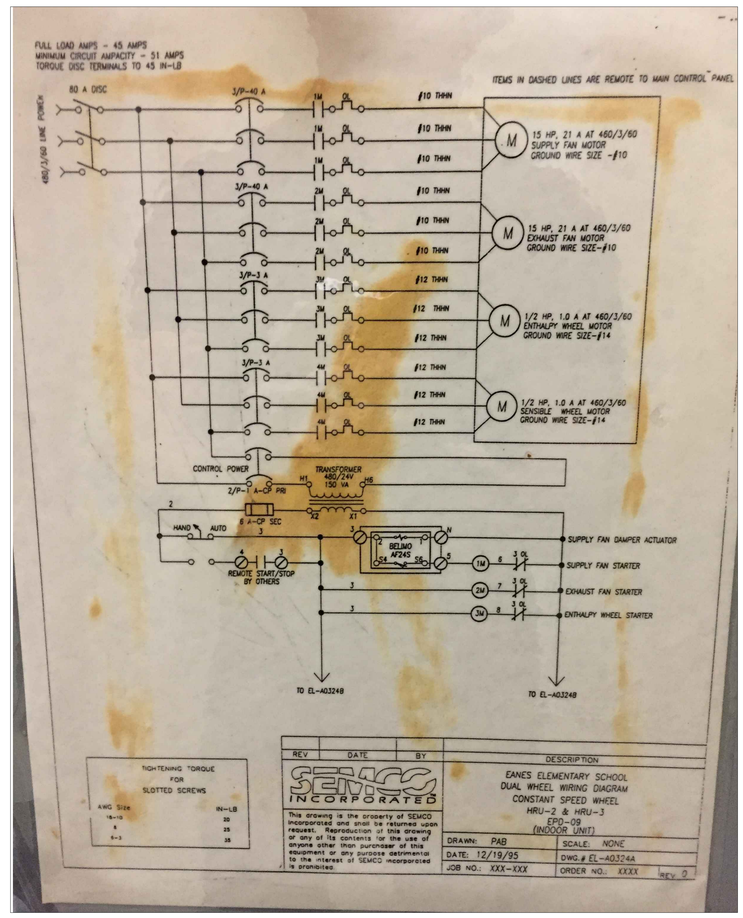

4 TYPICAL WIRING AND COMPONENT DIAGRAM
SCALE: N.T.S.

GENERAL NOTES (HVAC)

1. REFER TO ARCHITECT'S DRAWINGS FOR THE EXTENT OF WALL & CEILING DEMOLITION INCLUDED IN THE SCOPE OF WORK. REFER TO DETAIL SHEETS FOR ADDITIONAL INSTALLATION INSTRUCTIONS.
2. REMOVE ALL ITEMS NORMALLY INSTALLED BY THIS TRADE IN WALLS TO BE DEMOLISHED & AS OTHERWISE REQUIRED BY THE SCOPE OF WORK. PATCH ANY OPENINGS IN FLOORS, WALLS, ROOF, ETC. CREATED AS A RESULT OF THIS DEMOLITION. TO MATCH SURROUNDING CONSTRUCTION.
3. REMOVE CEILING AIR DEVICES AS INDICATED ON THE DRAWINGS AND AS APPLICABLE TO ACCOMPLISH THE SCOPE OF WORK. WHERE AIR DEVICES ARE TO BE REUSED AS PART OF THE SCOPE OF WORK, SALVAGE AIR DEVICES, CLEAN, AND STORE FOR REINSTALLATION. WHERE AIR DEVICES ARE NOT TO BE REUSED AS PART OF THE SCOPE OF WORK, OFFER THEM TO OWNER; IF OWNER DOES NOT WANT THEM, REMOVE AND DISPOSE OF PROPERLY.
4. REMOVE ALL UNNEEDED AND/OR ABANDONED MATERIALS & EQUIPMENT BACK TO THE LIMITS OF CONSTRUCTION OR THE NEAREST POINT AT WHICH THE ITEM IS REQUIRED TO REMAIN IN SERVICE. CAP AS APPROPRIATE. REINSULATE DUCTWORK WHEREVER INSULATED DUCTWORK IS PATCHED, CAPPED, ETC.
5. REFER TO THE LEGEND SHEET FOR LEGEND, ABBREVIATIONS, & GENERAL MECHANICAL NOTES. REFER TO DIVISION 23 SPECIFICATIONS.
6. HEAVY LINES INDICATE NEW WORK; LIGHT LINES INDICATE APPROXIMATE EXISTING CONDITIONS. FIELD VERIFY PRIOR TO BIDDING.
7. MAKE DUCT TAPS, RUNOUTS, & FLEX DUCT CONNECTIONS TO AIR DEVICES SAME SIZE AS DUCT CONNECTION SIZE INDICATED ON DIFFUSER & GRILLE SCHEDULE UNLESS OTHERWISE INDICATED.
8. COORDINATE ALL WORK SCHEDULING WITH ARCHITECT PRIOR TO BIDDING TO DETERMINE THE EXTENT OF AFTER-HOURS WORK REQUIRED, & INCLUDE SUCH AFTER-HOURS WORK.
9. ALL DUCT DIMENSIONS INDICATED ARE CLEAR INSIDE DIMENSIONS. CONSTRUCT ALL DUCTWORK DOWNSTREAM OF TERMINAL UNITS TO SMACNA 2 IN. PRESSURE CLASSIFICATION UNLESS OTHERWISE INDICATED. SEAL ALL DUCTWORK TO SMACNA TYPE A SEAL CLASS UNLESS OTHERWISE INDICATED.
10. USE GALVANIZED STEEL FOR ALL DUCTWORK, WITH 2 IN. THICK, 3/4 LB. DENSITY BLANKET WRAP INSULATION UNLESS OTHERWISE INDICATED. DO NOT INSULATE EXHAUST DUCTWORK UNLESS OTHERWISE INDICATED.
11. USE FLEX DUCT INSULATED TO A MINIMUM OF R-6; CODY 184, ATCO UPC #036 OR EQUIVALENT. INSTALL IN LENGTHS NOT EXCEEDING 6 FT.
12. COORDINATE EXACT LOCATION OF AIR DEVICES WITH ARCHITECT PRIOR TO INSTALLATION. SHIFT AIR DEVICES AS REQUIRED TO FIT WITHIN ROOMS. MODIFY DUCTWORK ARRANGEMENT AS REQUIRED TO LOCATE DIFFUSERS.
13. COORDINATE LOCATION OF WALL-MOUNTED CONTROLS WITH ARCHITECT PRIOR TO ROUGH-IN.
14. MOUNT WALL SENSORS 46 IN. AFF, 8 IN. TO ONE SIDE OF LIGHT SWITCHES WHERE BOTH OCCUR IN THE SAME LOCATION, UNLESS OTHERWISE INDICATED.
15. DO NOT RUN AIR HANDLERS OR FANS UNTIL ALL INTERIOR CLEANING & PAINTING IS COMPLETE. CLEAN OR REPLACE ANY EQUIPMENT, DUCTWORK, ETC., WHICH IS FOULED DUE TO PAINT OR CONSTRUCTION DEBRIS.
16. WHERE WORK IS ADJACENT TO OCCUPIED SPACE, KEEP CONSTRUCTION AREA AT A NEGATIVE PRESSURE RELATIVE TO SUCH SPACES, & FILTER DISCHARGE AIR AS REQUIRED TO CONTAIN DUST.

KEYED NOTES

1. INSTALL NEW BLOWERS, DX COILS, AND SINGLE ENTHALPY WHEEL.
2. INSTALL NEW HEATER.
3. INSTALL NEW DUCTWORK FROM HRU TO EXISTING DUCT.
4. INSTALL INSULATED METAL PLATE TO COVER UNUSED SENSIBLE WHEEL OPENING.
5. DEMOUNT LOCATION MAY BE USED AS ACCESS TO FANS AND WHEEL SECTIONS.
6. EXISTING DUCT DETECTOR TO REMAIN.
7. NEW ENCLOSURE FOR HRU CONTROL CENTER RE: SPEC
8. TYPICAL WIRING DIAGRAM AND COMPONENTS FOR NEW HRU CONTROL CENTER. (FOR REFERENCE ONLY).

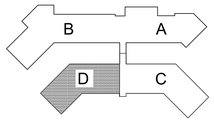

TRUE NORTH
PLAN NORTH

KEYPLAN
NOT TO SCALE

ENLARGED MECHANICAL HRU PLAN

TBPE Registered Engineering Firm F-542
MWE NGINEERING, INC
1120 Capital of Texas Hwy South
Building 1, Suite 150
Austin, TX 78746
(512) 330-9630
MWP
1900 Colonial Blvd.
Suite 230
Austin, TX 78626
(210) 389-4400

STATE OF TEXAS
RANDY C. FUSTOS
92454
LICENSED
PROFESSIONAL ENGINEER

EANES INDEPENDENT SCHOOL DISTRICT
6401 CEDAR STREET, AUSTIN, TX 78746

BRIDGE POINT ELEMENTARY - HVAC RENOVATION

DATE	REVISION
02/08/17	ADDENDUM #1

DRAWN BY: AM
PROJECT NO.: 39602
DATE: 2/8/2017
CHECKED BY: RCF
SHEET:

M4.1

39602-M4 MECH Enlarged Plan

Plot Time: 2/8/2017 6:24:31 PM – Plotted By: ALEX MEANS

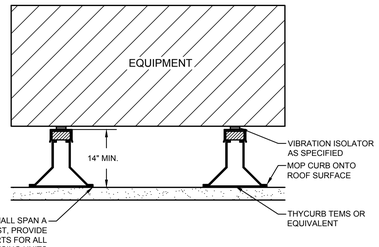

NOTE:
1. COORDINATE EXACT LOCATION WITH EQUIPMENT ACTUALLY SUPPLIED. COORDINATE W/ ALL TRADES. REFER TO ROOFING DETAILS FOR ADDITIONAL INFORMATION.

1 ROOF EQUIPMENT SUPPORT DETAIL
SCALE: NOT TO SCALE

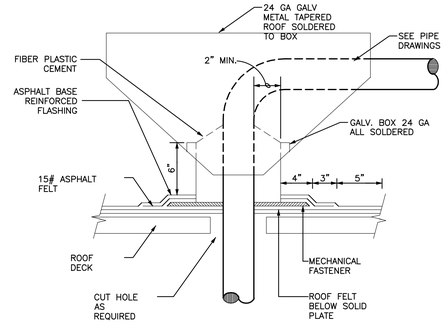

2 PIPE THRU ROOF PENETRATION DETAIL
SCALE: NOT TO SCALE

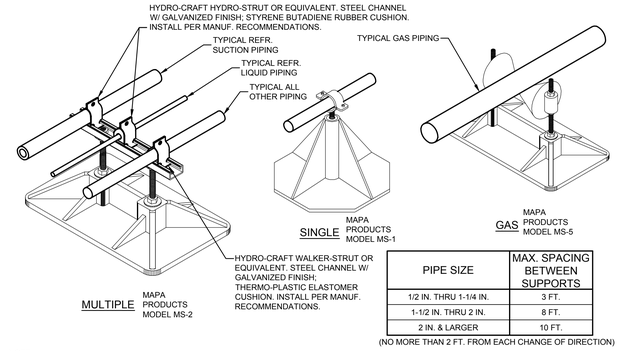

PIPE SIZE	MAX. SPACING BETWEEN SUPPORTS
1/2 IN. THRU 1-1/4 IN.	3 FT.
1-1/2 IN. THRU 2 IN.	8 FT.
2 IN. & LARGER	10 FT.

(NO MORE THAN 2 FT. FROM EACH CHANGE OF DIRECTION)

NOTE:
1. IF CONDUIT/PIPING LAYOUT IS NOT SHOWN, GROUP CONDUIT/PIPE TO MINIMIZE SUPPORTS ON ROOF; COORDINATE W/ ALL TRADES.

3 ROOF PIPE / CONDUIT SUPPORT DETAIL
SCALE: NOT TO SCALE

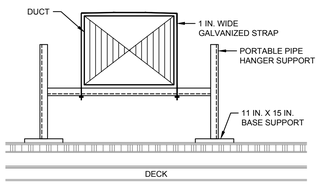

4 DUCT SUPPORT ON ROOF
SCALE: NOT TO SCALE

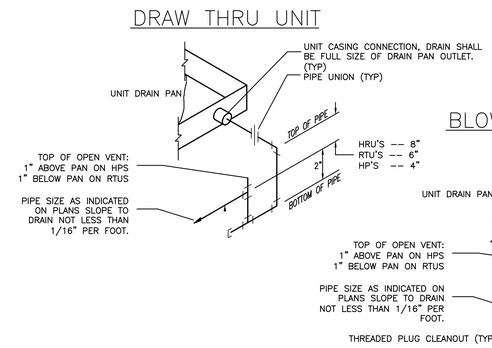

5 CONDENSATE DRAIN TRAP
SCALE: NOT TO SCALE

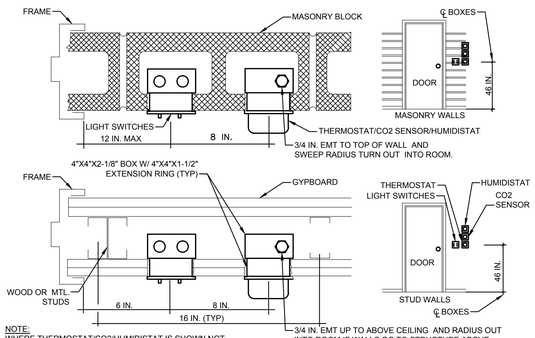

NOTE:
WHERE THERMOSTAT/CO2/HUMIDISTAT IS SHOWN NOT ADJACENT TO LIGHT SWITCH, INSTALL SIMILARLY.

6 ROOM THERMOSTAT / CO2 SENSOR/ HUMIDISTAT LIGHT SWITCH DETAIL
SCALE: NOT TO SCALE

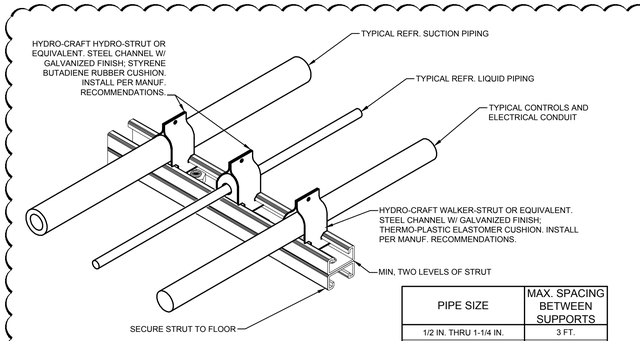

PIPE SIZE	MAX. SPACING BETWEEN SUPPORTS
1/2 IN. THRU 1-1/4 IN.	3 FT.
1-1/2 IN. THRU 2 IN.	8 FT.
2 IN. & LARGER	10 FT.

(NO MORE THAN 2 FT. FROM EACH CHANGE OF DIRECTION)

NOTE:
1. IF CONDUIT/PIPING LAYOUT IS NOT SHOWN, GROUP CONDUIT/PIPE TO MINIMIZE SUPPORTS ON ROOF; COORDINATE W/ ALL TRADES.

7 FLOOR PIPE/CONDUIT SUPPORT
SCALE: NOT TO SCALE

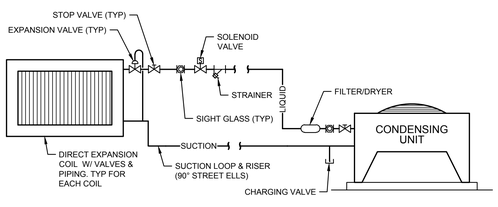

NOTE: F&I SOLENOID VALVES & ASSOCIATED CONTROLS PER MANUFACTURER'S RECOMMENDATIONS. SIZE ALL REFRIGERANT PIPING PER MANUFACTURER'S RECOMMENDATIONS.

8 REFRIGERANT PIPING
SCALE: NOT TO SCALE

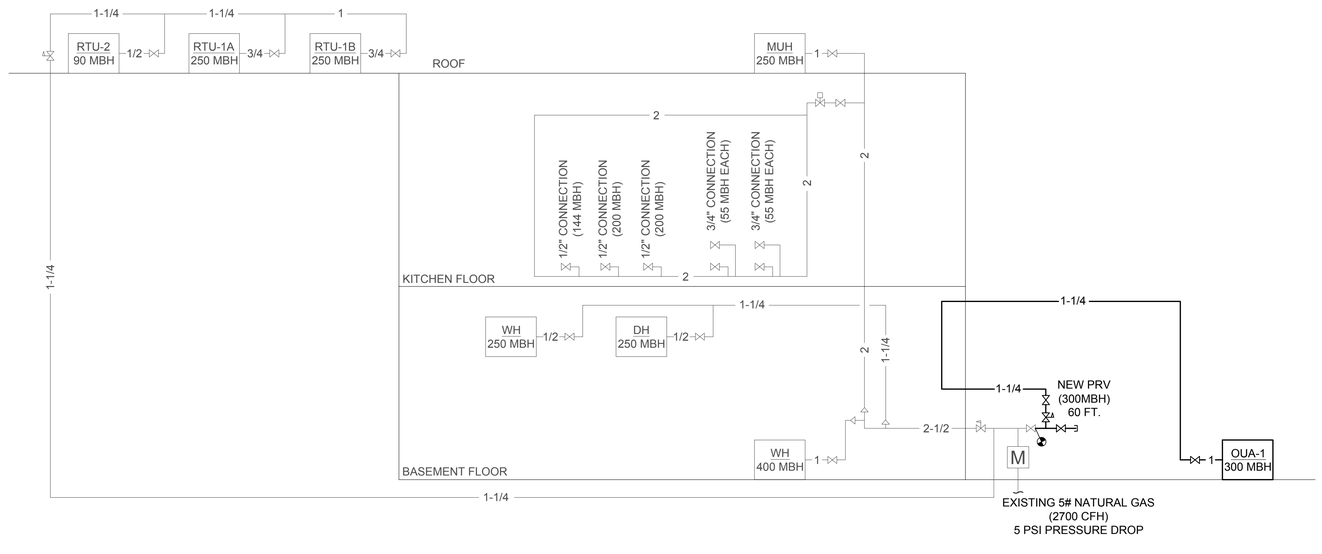

9 GAS RISER DIAGRAM
SCALE: NOT TO SCALE

TBPE Registered Engineering Firm F-542
MWP ENGINEERING, INC.
1120 Capital of Texas Hwy. South
Building 1, Suite 150
Austin, TX 78746
(512) 330-9630

9600 Coloradoo Blvd.
Suite 320
Littleton, TX 78209
(210) 589-4401

STATE OF TEXAS
RANDY C. FUSTON
92454
LICENSED
PROFESSIONAL ENGINEER

EANES INDEPENDENT SCHOOL DISTRICT
BRIDGE POINT ELEMENTARY - HVAC RENOVATION
6401 CEDAR STREET, AUSTIN, TX 78746

DATE	REVISION
02/08/17	ADDENDUM #1

DRAWN BY: AM
PROJECT NO.: 39602
DATE: 2/8/2017
CHECKED BY: RCF
SHEET:
M5.1

39602 M5 MECH Details

MECHANICAL DETAILS

Plot Time: 2/8/2017 6:46:01 PM – Plotted By: RANDY FUSTON